# Typewriter

**Parts Catalog**

# IBM Wheelwriters

Wheelwriter

typewriter

LEXMARK

This Parts Catalog contains listings and illustrations of all replaceable assemblies and detail parts for the IBM® Wheelwriter® 3, 6, 10, 15, 30, 35, 50, 70, 1500, 3500, 5000, and 7000 Series II Typewriters.

**First Edition (June 1993)**

**The following paragraph does not apply to the United Kingdom or any country where such provisions are inconsistent with local law:** LEXMARK INTERNATIONAL, INC. PROVIDES THIS PUBLICATION "AS IS" WITHOUT WARRANTY OF ANY KIND, EITHER EXPRESS OR IMPLIED, INCLUDING, BUT NOT LIMITED TO, THE IMPLIED WARRANTIES OF MERCHANTABILITY OR FITNESS FOR A PARTICULAR PURPOSE. Some states do not allow disclaimer of express or implied warranties in certain transactions, therefore, this statement may not apply to you.

References in this publication to products, programs, or services do not imply that the manufacturer intends to make these available in all countries in which it operates. Any reference to a product, program, or service in this publication is not intended to state or imply that only that product, program, or service may be used. Any functionally equivalent product, program, or service that does not infringe any existing intellectual property right may be used instead.

This publication could include technical inaccuracies or typographical errors. Changes are periodically made to the information herein; these changes will be incorporated in later editions of the publication. Improvements and/or changes in the product(s) and/or the program(s) described in this publication may be made at any time.

IBM and Wheelwriter are registered trademarks of the International Business Machines Corporation in the United States and/or other countries and are used under license.

Publications are not stocked at the address given below; requests for publications should be made to your point of purchase.

A form for reader's comments is provided at the back of this publication. If the form has been removed, comments may be addressed to Lexmark International, Inc., Department F95/035-3, 740 New Circle Road, Lexington, Kentucky 40511, U.S.A. Lexmark may use or distribute any of the information you supply in any way it believes appropriate without incurring any obligation to you.

**© Copyright Lexmark International, Inc. 1989, 1992.**
**All rights reserved.**

**UNITED STATES GOVERNMENT RESTRICTED RIGHTS**
This software and documentation are provided with RESTRICTED RIGHTS. Use, duplication or disclosure by the Government is subject to restrictions as set forth in subparagraph (c)(1)(ii) of the Rights in Technical Data and Computer Software clause at DFARS 252.227-7013 and in applicable FAR provisions: Lexmark International, Inc., Greenwich, CT 06836.

# Parts Catalog

**How To Use This Parts Catalog**

• SIMILAR ASSEMBLIES: If two assemblies contain a majority of identical parts, they are broken down on the same list. Common parts are shown by one index number. Parts peculiar to one or the other of the assemblies are listed separately and identified by description.

• AR: (As Required) in the Units column indicates that the quantity is not the same for all machines.

• NP: (Non-Procurable) in the Units column indicates that the part is non-procurable and that the individual parts or the next higher assembly should be ordered.

• NR: (Not Recommended) in the Units column indicates that the part is procurable but not recommended for field replacement, and that the next higher assembly should be ordered.

• R: (Restricted) in the Units column indicates that the part has a restricted availability.

• INDENTURE: The indenture is marked by a series of dots located before the parts description. The indenture indicates the relationship of a part to the next higher assembly. For example:

| Indenture | Relationship of Parts |
|---|---|
| (No dot) | MAIN ASSEMBLY |
| (One dot) | • Detail parts of a main assembly |
| (One dot) | • Subassembly of the main assembly |
| (Two dot) | • • Detail part of a one-dot subassembly |
| (Two dot) | • • Subassembly of a one-dot subassembly |
| (Three dot) | • • • Detail part of a two-dot subassembly |

| Asm-Index | Part Number | Units | Description |
|---|---|---|---|
| 3- | 2512667 | 1 | Cover Asm, Rear, Red |
| | | | Cover Asm, Rear, White |
| | | | For Next Higher Asm, |
| | 2513714 | 1 | See Assembly 1-2 |
| -1 | 5373637 | 1 | •Seal, Top |
| -2 | 5356429 | 2 | •Clip, Retaining |
| -3 | 1847630 | 1 | •Finger Stock Asm |
| -4 | 1847602 | NR | ••Channel, Finger Stock |
| -5 | 5373639 | AR | •Seal, Bottom |
| -6 | 5356429 | 2 | •Clip, Retaining |
| -7 | | NP | •Cover, Rear, Without Paint |
| -5 | 0416629 | R | •Screw, Panel |

## Assemblies


Catalog Section . . . . . 3
Assembly 1: Cover Assembly . . . . . 4
Assembly 2: Keyboard Assembly, WW3/6 . . . . . 12
Assembly 3: Keyboard Assembly, WW10 . . . . . 14
Assembly 4: Keyboard Assembly, WW15 . . . . . 16
Assembly 5: Keyboard Assembly, WW30 . . . . . 18
Assembly 6: Keyboard Assembly, WW1500 . . . . . 20
Assembly 7: Keyboard Assembly, WW3000 . . . . . 22
Assembly 8: Keyboard Assembly, WW35, WW3500 . . . . . 24
Assembly 9: Keyboard Assembly, WW50, WW70, WW5000, WW7000 . . . . . 26
Assembly 10: Paperfeed Assembly . . . . . 28
Assembly 11: Electronics, WW3/6 . . . . . 32
Assembly 12: Electronics WW10, WW15, WW30, WW35, WW50, WW70, . . . . . 34
Assembly 13: Electronics WW1500, WW3000, WW3500, WW5000, WW7000 . . . . . 38
Assembly 14: Carrier Assembly . . . . . 40
Assembly 15: Ribbon Assembly . . . . . 42
Assembly 16: Transport Assembly . . . . . 44
Assembly 17: CRT Display Assembly, WW50, WW70, WW5000, WW7000 . . . . . 45
Assembly 18: CRT Display Mounting Arm Option Assembly, WW50, WW70, WW5000, WW7000 . . . . 46
Assembly 19: Diskette Drive Option WW30, WW35, WW50, WW70, WW3500, WW5000, WW7000 . . . . 48
Assembly 20: Memory Expansion, WW30 . . . . . 52
Assembly 21: Pinwheel Form Feeder Assembly . . . . . 53
Assembly 22: Sheetfeed/Form Feed Adapter Kit, WW10, WW15, WW30, WW35, WW50, WW70, WW1500, WW3000, WW3500, WW5000, WW7000 . . . . . 54
Assembly 23: Sheetfeed Assembly . . . . . 56
Assembly 24: Printer Option, WW10, WW15, WW30, WW35, WW50, WW70, WW1500, WW3000, WW3500, WW5000, WW7000 . . . . . 62
Assembly 25: Soundhood Assembly . . . . . 64
Assembly 26: Spell Check I Option, WW10, WW15, WW1500, WW3000 . . . . . 65
Assembly 27: Spell Check Option I and II, WW30, WW35, WW50, WW3500, WW5000 . . . . . 66
Assembly 28: Extended Language Option—WW15 . . . . . 67

# Catalog Section

## Assembly 1: Cover Assembly

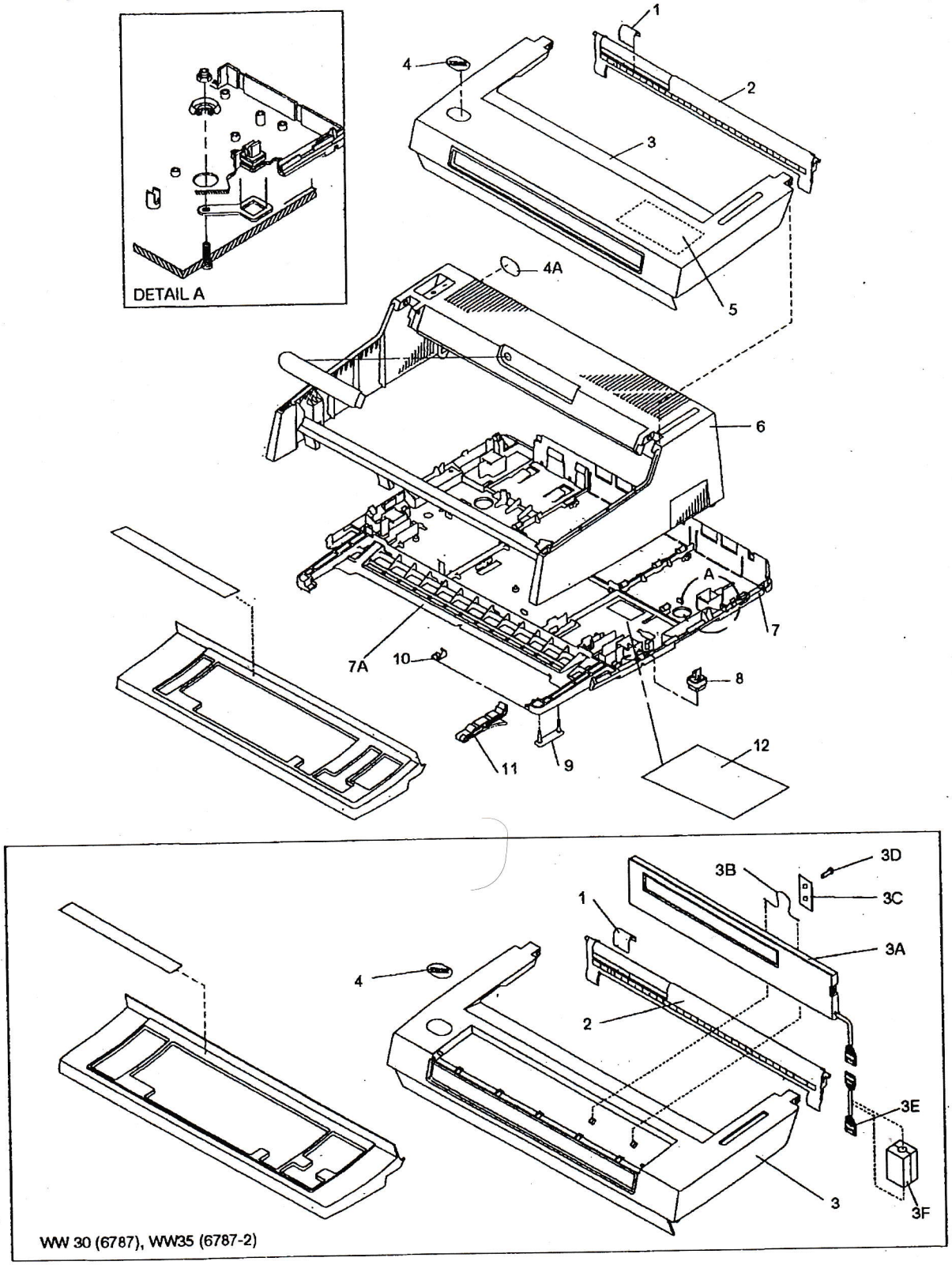

| Asm– Index | Part Number | Units | Description |
|---|---|---|---|
| 1–1 | 1430157 | 1 | Guide,Paper Edge |
| –2 | 1430156 | 1 | Table,Erase |
| –3 | 1433662 | 1 | Cover,Top, WW3, WW6, WW10, WW15 (old style), WW50, WW70 |
| –3 | 1434500 | 1 | Cover,Top, WW30, WW35 |
| –3A | 1384960 | 1 | Display Asm, LCD, WW30 |
| –3A | 1400357 | 1 | Display Asm, LCD, WW35 8/99 COST 179.56 |
| –3B | 1430779 | 1 | Bail,Display Pivot, WW30, WW35 |
| –3C | 1430778 | 1 | Spring,Display Pivot, WW30, WW35 |
| –3D | 1430781 | 2 | Screw,Display Spring Mtg, WW30, WW35 |
| –3E | 1430762 | 1 | Cable,Display, WW30 |
| –3F | 1043533 | 1 | Toroid, LCD Cable, WW35, WW3500 |
| –4 | 1432486 | 1 | Logo,Top, Oval, U.S. WW3 |
| –4 | 1432492 | 1 | Logo,Top, Oval, U.S. WW6 |
| –4 | 1432494 | 1 | Logo,Top, Oval, Canadian/French, WW6 |
| –4 | 1430788 | 1 | Logo,Top, Oval,Non U.S. WW6 |
| –4 | 1429223 | 1 | Logo,Top, U.S. WW6 |
| –4 | 1429227 | 1 | Logo,Top, Canadian/French, WW6 |
| –4 | 1429225 | 1 | Logo,Top, Non U.S. WW6 |
| –4 | 1430194 | 1 | Logo,Top, Oval, U.S. WW10 |
| –4 | 1432579 | 1 | Logo,Top, Oval, Canadian/French, WW10 |
| –4 | 1430192 | 1 | Logo,Top, Oval, Non U.S. WW10 |
| –4 | 1429181 | 1 | Logo,Top, U.S. WW10 |
| –4 | 1434108 | 1 | Logo,Top, Oval, U.S. WW15 |
| –4 | 1434114 | 1 | Logo,Top, Oval, Canadian/French WW15 |
| –4 | 1434112 | 1 | Logo,Top, Oval, Non U.S. WW15 |
| –4 | 1429183 | 1 | Logo,Top, U.S. WW15 |
| –4 | 1429187 | 1 | Logo,Top, Canadian/French WW15 |
| –4 | 1429185 | 1 | Logo,Top, Non U.S. WW15 |
| –4 | 1431279 | 1 | Logo,Top, Oval, U.S. WW30 |
| –4 | 1431281 | 1 | Logo,Top, Oval, Canadian/French, WW30 |
| –4 | 1430790 | 1 | Logo,Top, Oval, Non U.S. WW30 |
| –4 | 1429370 | 1 | Logo,Top, U.S. WW35 |
| –4 | 1429374 | 1 | Logo,Top, Canadian/French WW35 |
| –4 | 1429372 | 1 | Logo,Top, Non U.S. WW35 |
| –4 | 1431284 | 1 | Logo,Top, Oval, U.S./Canada/English/Puerto Rico, WW50 |
| –4 | 1431291 | 1 | Logo,Top, Oval, Non U.S. WW50 |
| –4 | 1431286 | 1 | Logo,Top, Oval, French/Canadian, WW50 |
| –4 | 1429193 | 1 | Logo,Top, U.S. WW50 |
| –4 | 1429195 | 1 | Logo,Top, Non U.S. WW50 |
| –4 | 1429197 | 1 | Logo,Top, French/Canadian, WW50 |
| –4 | 1431289 | 1 | Logo,Top, Oval, U.S./Canada/English/Puerto Rico, WW70 |
| –4 | 1431293 | 1 | Logo,Top, Oval, Non U.S. WW70 |
| –4 | 1429199 | 1 | Logo,Top, U.S./Canada/English/Puerto Rico, WW70 |
| –4 | 1429201 | 1 | Logo,Top, Non U.S. WW70 |

## Assembly 1: (continued)

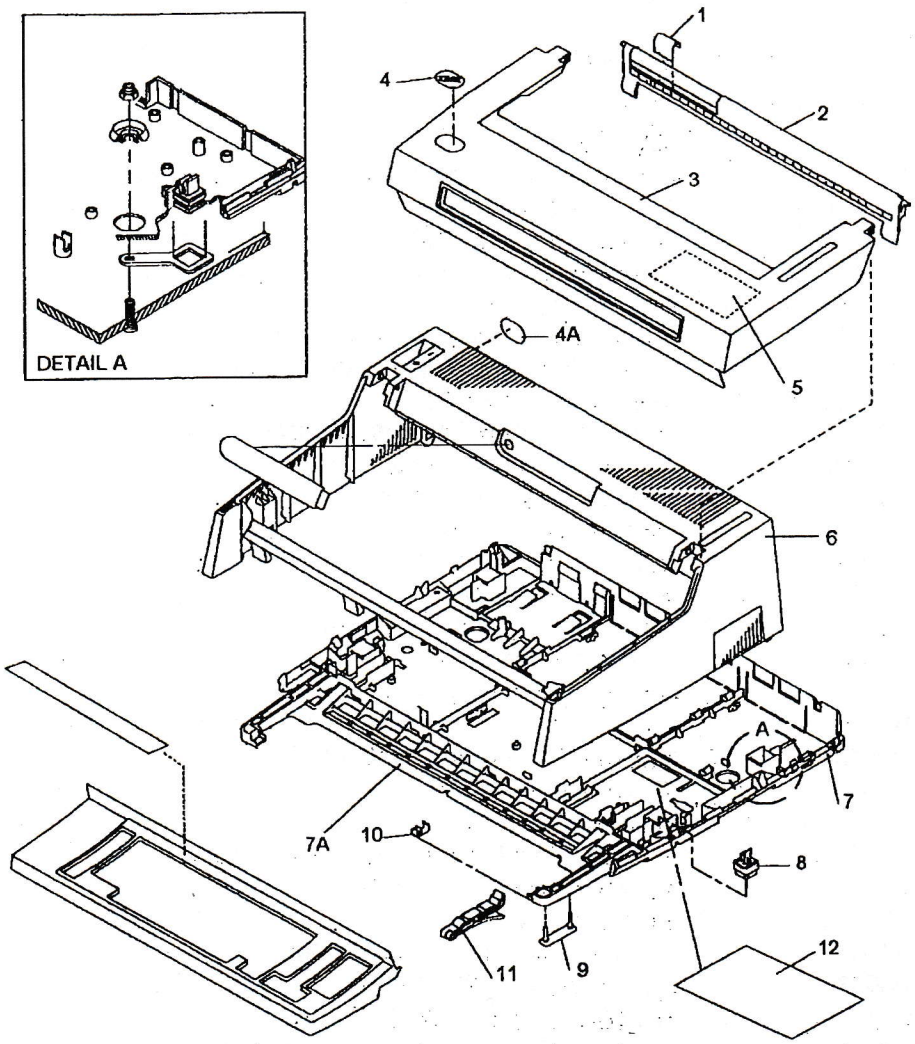


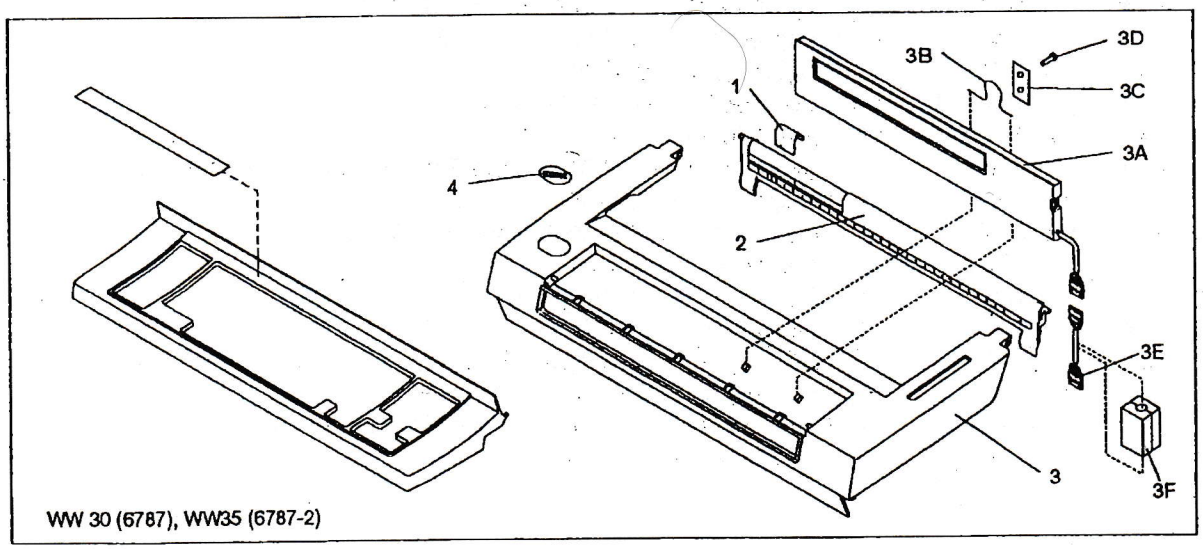

| Asm— Index | Part Number | Units | Description |
|---|---|---|---|
| 1—4 | 1371150 | 1 | Logo,Top, U.S. WW1500 |
| —4 | 1371152 | 1 | Logo,Top, Non U.S. WW1500 |
| —4 | 1364747 | 1 | Logo,Top, U.S. WW3000 |
| —4 | 1364749 | 1 | Logo,Top, Non U.S. WW3000 |
| —4 | 1376635 | 1 | Logo,Top, U.S. WW3500 |
| —4 | 1376637 | 1 | Logo,Top, Non U.S. WW3500 |
| —4 | 1377600 | 1 | Logo,Top, U.S. WW5000 |
| —4 | 1377602 | 1 | Logo,Top, Non U.S. WW5000 |
| —4 | 1332666 | 1 | Logo,Top, Non U.S. WW7000 |
| —4A | 1430786 | 1 | Logo,Center, WW3 |
| —4A | 1430788 | 1 | Logo,Center, WW6 |
| —4A | 1430192 | 1 | Logo,Center, WW10 |
| —4A | 1434112 | 1 | Logo, Center, WW15 |
| —4A | 1430790 | 1 | Logo,Center, WW30 |
| —4A | 1431291 | 1 | Logo,Center, WW50 |
| —4A | 1431293 | 1 | Logo,Center, WW70 |
| —5 | 1356837 | 1 | Label,Feature Installation |
| —6 | 1433661 | 1 | Cover,Center |
| —7 | 1430163 | 1 | Cover Asm,Bottom |
| —7A | 1432591 | 1 | • Shield, EMC |
| —8 | 1432574 | 4 | • Shockmount Asm,Frame |
| —9 | 1337611 | 2 | • Shockmount,Keyboard |
| —10 | 1430176 | 2 | • Clip,Keyboard Mounting |
| —11 | 1430175 | 2 | • Lever,Keyboard Adjusting |
| —12 | 1430122 | 1 | Label,Voltage, MFG |

## Assembly 1: (continued)

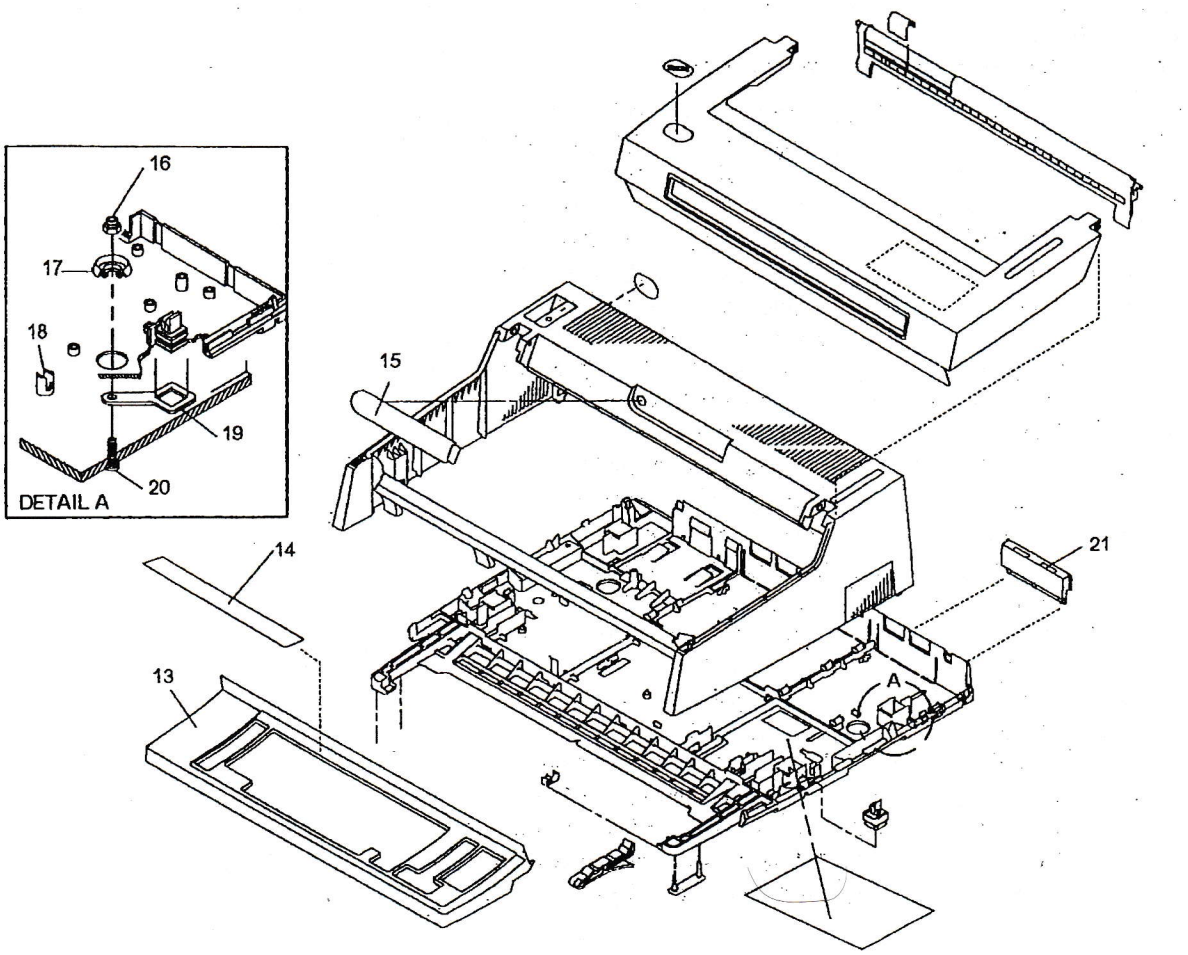


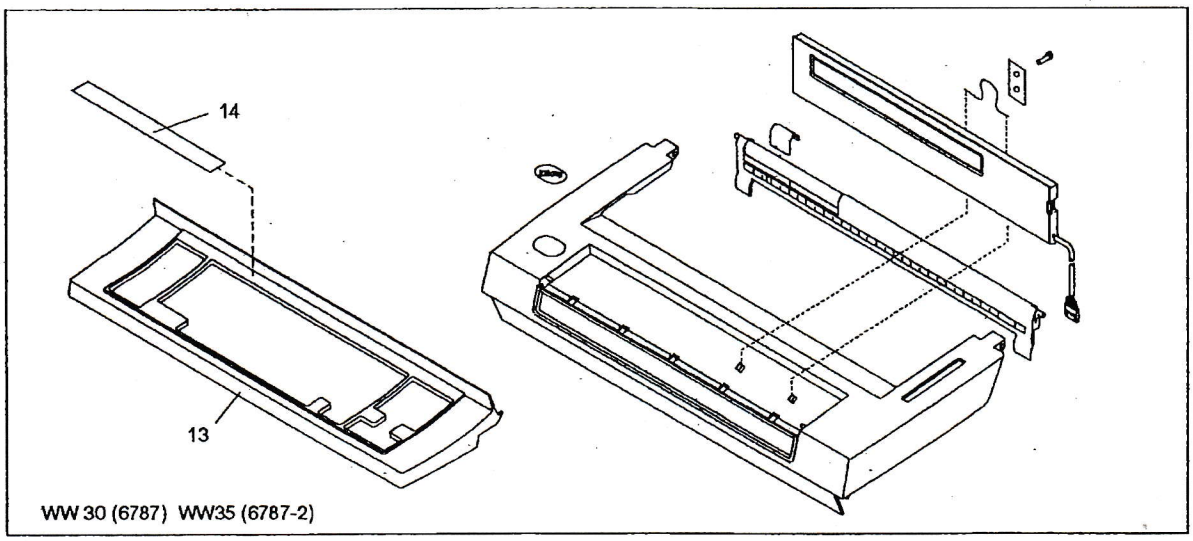

| Asm– Index | Part Number | Units | Description |
|---|---|---|---|
| 1–13 | 1431295 | 1 | Cover,Keyboard, WW3 |
| –13 | 1431296 | 1 | Cover,Keyboard, WW6 |
| –13 | 1430172 | 1 | Cover,Keyboard, WW10, WW15, (old style) |
| –13 | 1430753 | 1 | Cover,Keyboard, WW30, WW35, WW50, WW70 |
| –14 | 1432454 | 1 | Label,Spell Check, Abbreviations, WW10 |
| –14 | 1434145 | 1 | Label,Spell Check, Symbols, WW10, WW15, WW30, WW35, 1500, 3000, 3500 |
| –14 | 1432484 | 1 | Label,Spell Check II, U.S, Abbreviations, WW30, WW35, WW50, WW70, 3500, 5000, 7000 |
| –14 | 1434598 | 1 | Label,Spell Check II, Symbols, WW30, WW35, WW50, WW70, 3500, 5000, 7000 |
| –14 | 1434515 | 1 | Label,Spell Check, with Diskette, Abbreviations, WW30, WW35, WW50, WW70, 3500, 5000, 7000 |
| –14 | 1434513 | 1 | Label,Spell Check II, with Diskette, Abbreviations, WW30, WW35, WW50, WW70, 3500, 5000, 7000 |
| –14 | 1434517 | 1 | Label,Spell Check II, with Diskette, Symbols, WW30, WW35, WW50, WW70, 3500, 5000, 7000 |
| –15 | 1430168 | 1 | Indicator Asm, End of Page |
| –16 | 0117281 | AR | Nut,Bolt-Down |
| –17 | 1432358 | AR | Collar,Bolt-Down |
| –18 | 1342428 | 1 | Guide,Hole Aligning |
| –19 | 1432359 | 1 | Plate,RH Hold Down |
| –19 | 1342372 | 1 | Plate,LH Hold Down |
| –20 | 1287007 | AR | Bolt, 5/8″ |
| –20 | 1287008 | AR | Bolt, 3/4″ |
| –20 | 1287009 | AR | Bolt, 1″ |
| –20 | 1287010 | AR | Bolt, 1 1/4″ |
| –20 | 1287011 | AR | Bolt, 1 1/2″ |
| –20 | 1287012 | AR | Bolt, 1 3/4″ |
| –20 | 1287013 | AR | Bolt, 2″ |
| –20 | 1287911 | AR | Bolt, 2 1/4″ |
| –22 | 1287912 | AR | Bolt, 2 1/2″ |
| –20 | 1287913 | AR | Bolt, 2 3/4″ |
| –20 | 1287914 | AR | Bolt, 3″ |
| –21 | 1383151 | 1 | Cover, Option Access |

**Assembly 1: (continued)**

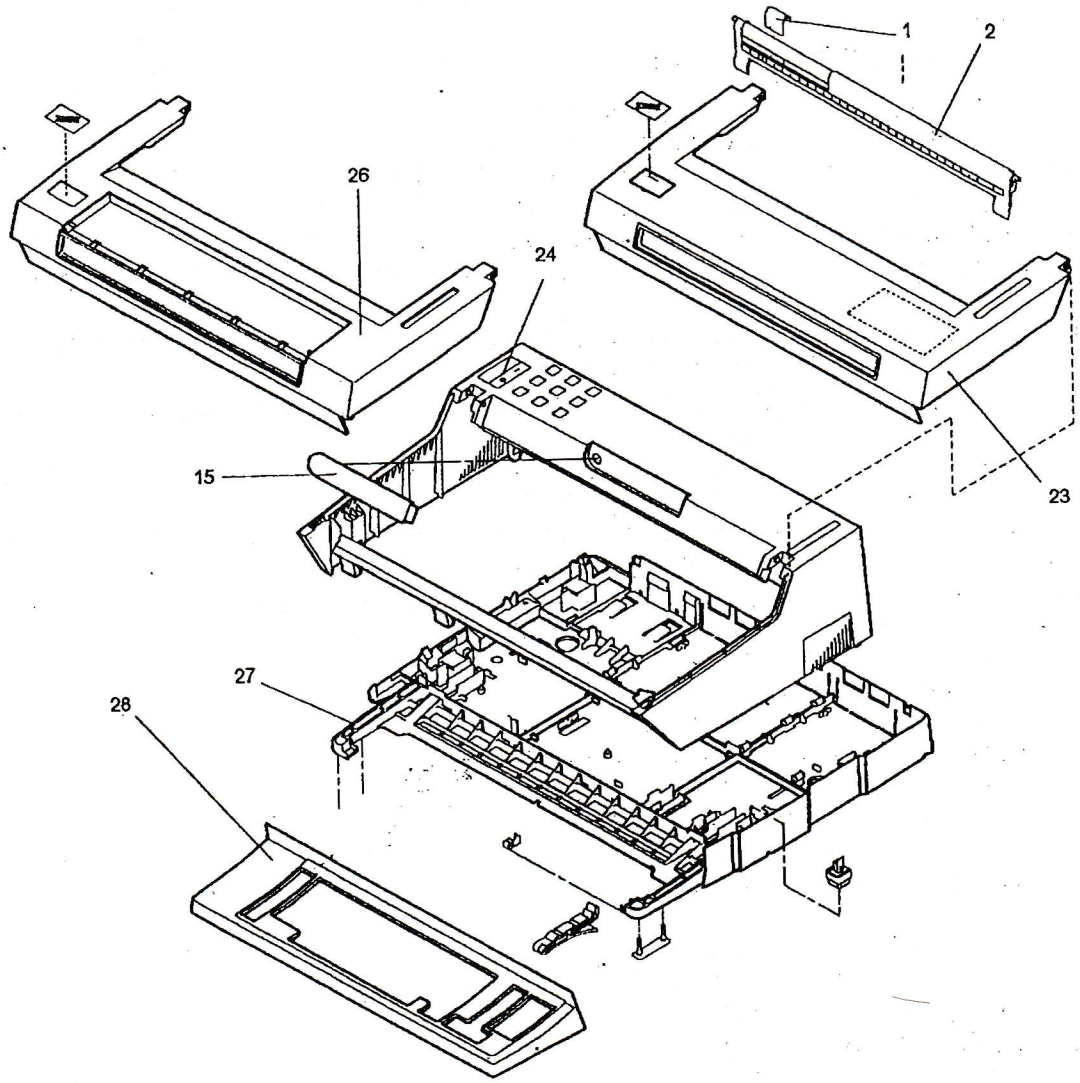

| Asm— Index | Part Number | Units | Description |
|---|---|---|---|
| 1—22 | 1364810 | 1 | Cover, Top/Center, WW15 (new style), WW1500, WW3000, WW5000, WW7000. |
| —23 | 1364815 | 1 | • Cover,Top, |
| —24 | 1364811 | 1 | • Cover, Center |
| —1 | 1430157 | 1 | • Guide,Paper Edge |
| —2 | 1430156 | 1 | • Table,Erase |
| —15 | 1430168 | 1 | • Indicator Asm., End of page |
| —25 | 1364820 | 1 | Cover, Top/Center, WW3500. |
| —26 | 1364825 | 1 | • Cover,Top, |
| —24 | 1364811 | 1 | • Cover, Center |
| —1 | 1430157 | 1 | • Guide,Paper Edge |
| —2 | 1430156 | 1 | • Table,Erase |
| —15 | 1430168 | 1 | • Indicator Asm., End of page |
| —27 | 1364801 | 1 | Cover, Bottom, WW15 (new style), WW1500, WW3000, WW5000, WW7000. $ 46.75 Cost |
| —28 | 1364831 | 1 | Cover,Keyboard, WW1500, 3000 |
| —28 | 1364832 | 1 | Cover,Keyboard, WW3500, 5000, 7000 |
| —28 | 1364833 | 1 | Cover,Keyboard, WW15 (new style) |

## Assembly 2: Keyboard Assembly, WW3/6

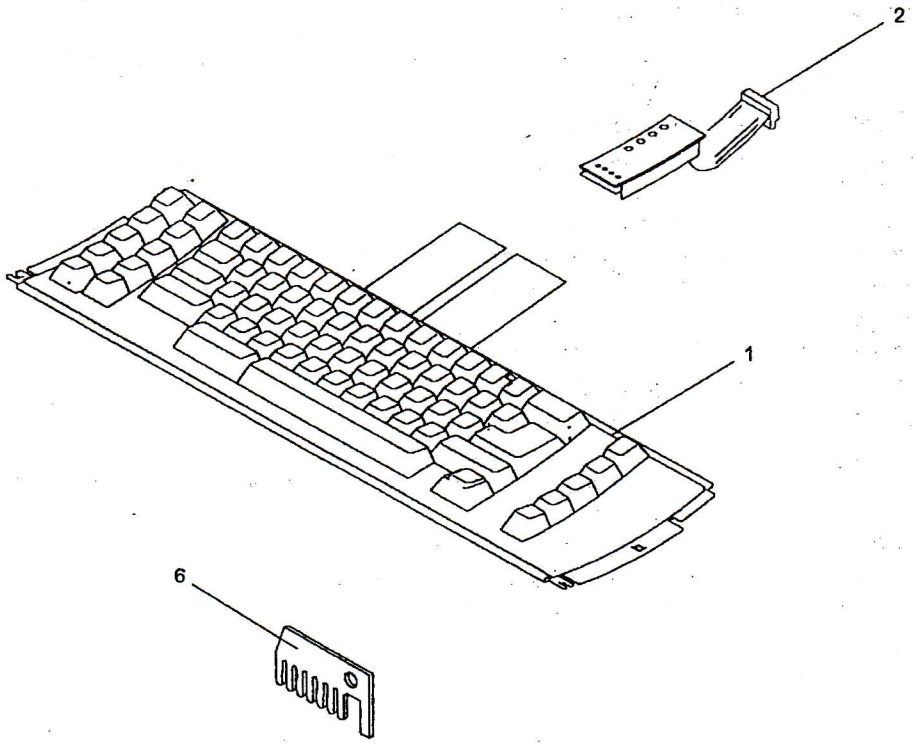

| Asm– Index | Part Number | Units | Description |
|---|---|---|---|
| 2–1 | 1383001 | 1 | Keyboard, U.S, Period, WW3 |
| –1 | 1383003 | 1 | Keyboard, U.S., Australia, New Zealand, Period, WW6 |
| –1 | 1383007 | 1 | Keyboard, Bulgaria, WW6 |
| –1 | 1383008 | 1 | Keyboard, Canada/Bilingual, WW6 |
| –1 | 1383026 | 1 | Keyboard, Czech Republic, WW6 |
| –1 | 1383027 | 1 | Keyboard, Slovakia, WW6 |
| –1 | 1383009 | 1 | Keyboard, Denmark, WW6 |
| –1 | 1383006 | 1 | Keyboard, France/Belgium, WW6 |
| –1 | 1383010 | 1 | Keyboard, Finland/Sweden, WW6 |
| –1 | 1383029 | 1 | Keyboard, Germany/Austria WW6 |
| –1 | 1383028 | 1 | Keyboard, Germany, East, WW6 |
| –1 | 1383029 | 1 | Keyboard, Germany, West, WW6 |
| –1 | 1383024 | 1 | Keyboard, Greece, WW6 |
| –1 | 1383012 | 1 | Keyboard, Hong Kong, WW6 |
| –1 | 1383030 | 1 | Keyboard, Hungary, WW6 |
| –1 | 1383011 | 1 | Keyboard, Italy, WW6 |
| –1 | 1383013 | 1 | Keyboard, Japan/English, WW6 |
| –1 | 1383068 | 1 | Keyboard, Japan, Katakana, WW6 |
| –1 | 1383014 | 1 | Keyboard, Latin America, Comma, WW6 |
| –1 | 1383015 | 1 | Keyboard, Latin America, Period, WW6 |
| –1 | 1383016 | 1 | Keyboard, Netherlands, WW6 |
| –1 | 1383017 | 1 | Keyboard, Norway, WW6 |
| –1 | 1383069 | 1 | Keyboard, Poland, WW6 |
| –1 | 1383018 | 1 | Keyboard, Portugal, WW6 |
| –1 | 1383070 | 1 | Keyboard, Romania, WW6 |
| –1 | 1383022 | 1 | Keyboard, South Africa, WW6 |
| –1 | 1383019 | 1 | Keyboard, Spain, WW6 |
| –1 | 1383020 | 1 | Keyboard, Switzerland/France, WW6 |
| –1 | 1383021 | 1 | Keyboard, Switzerland/Germany, WW6 |
| –1 | 1383023 | 1 | Keyboard, Turkey, WW6 |
| –1 | 1383005 | 1 | Keyboard, United Kingdom/Ireland, WW6 |
| –1 | 1383071 | 1 | Keyboard, Russian Cyrillic, WW6 |
| –1 | 1383072 | 1 | Keyboard, Yugoslavia (Latin/Cyrillic) WW6 |
| –2 | 1433004 | 1 | Panel/Annunciator, U.S. WW3 |
| –2 | 1433101 | 1 | Panel/Annunciator, U.S. WW6 (Abbreviations) |
| –2 | 1433107 | 1 | Panel/Annunciator, Non U.S. WW6 (Symbols) |
| –3 | 1393889 | 1 | Keybutton B/M, U.S. (92 key) |
| –3 | 1393892 | 1 | Keybutton B/M, U.S. (96 key) |
| –3 | 1393890 | 1 | Keybutton B/M, Canada/Bilingual |
| –3 | 1393891 | 1 | Keybutton B/M, Canada/English |
| –3 | 1393893 | 1 | Keybutton B/M, French |
| –3 | 1393895 | 1 | Keybutton B/M, Italy |
| –3 | 1393894 | 1 | Keybutton B/M, German |
| –3 | 1393896 | 1 | Keybutton B/M, Spain |
| –4 | 1392492 | 1 | Spacebar Kit |
| –5 | 1394999 | 1 | Keybutton B/M, Blank |
| –6 | 1392956 | 1 | Comb, Language Modification |

## Assembly 3: Keyboard Assembly, WW10

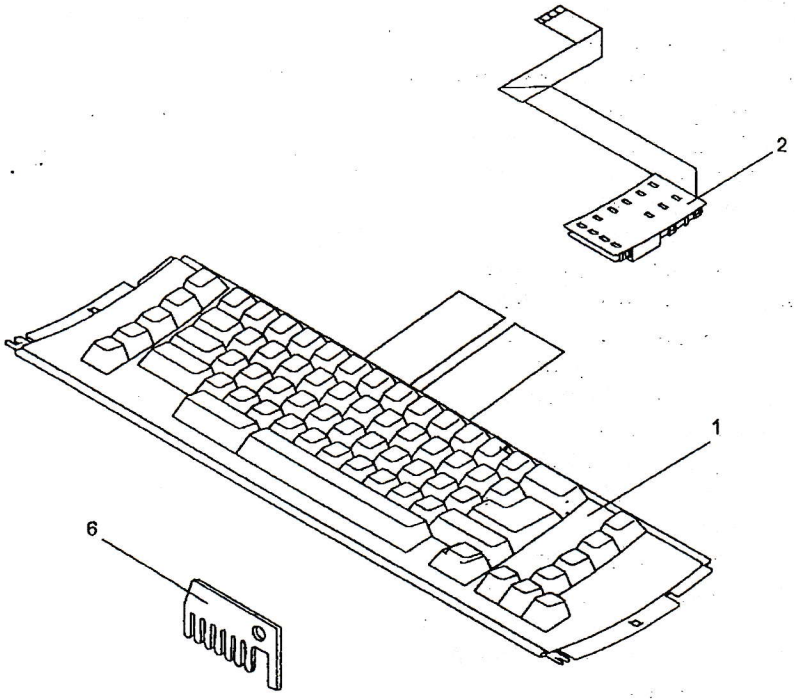

| Asm– Index | Part Number | Units | Description |
|---|---|---|---|
| 3–1 | 1384808 | 1 | Keyboard, U.S, Period |
| –1 | 1383853 | 1 | Keyboard, Brazil |
| –1 | 1384840 | 1 | Keyboard, Canada, Bilingual |
| –1 | 1384841 | 1 | Keyboard, Denmark |
| –1 | 1384838 | 1 | Keyboard, France/Belgium |
| –1 | 1384837 | 1 | Keyboard, Germany/Austria |
| –1 | 1384859 | 1 | Keyboard, Greece |
| –1 | 1384844 | 1 | Keyboard, Italy, Inches |
| –1 | 1384845 | 1 | Keyboard, Italy, Metric |
| –1 | 1384847 | 1 | Keyboard, Japan/English |
| –1 | 1384848 | 1 | Keyboard, Latin America, Period |
| –1 | 1384849 | 1 | Keyboard, Latin America, Comma |
| –1 | 1384850 | 1 | Keyboard, Netherlands |
| –1 | 1384851 | 1 | Keyboard, Norway |
| –1 | 1384852 | 1 | Keyboard, Portugal |
| –1 | 1384853 | 1 | Keyboard, Spain |
| –1 | 1384843 | 1 | Keyboard, Sweden |
| –1 | 1384854 | 1 | Keyboard, Switzerland/France |
| –1 | 1384855 | 1 | Keyboard, Switzerland/Germany |
| –1 | 1384857 | 1 | Keyboard, South Africa |
| –1 | 1384858 | 1 | Keyboard, Turkey |
| –1 | 1384842 | 1 | Keyboard, United Kingdom |
| –2 | 1430158 | 1 | Panel,Indicator, U.S. (Abbreviations) |
| –2 | 1430189 | 1 | Panel,Indicator, Non-U.S. (Symbols) |
| –3 | 1393642 | 1 | Keybutton B/M, U.S. (92 key) |
| –3 | 1393266 | 1 | Keybutton B/M, U.S. (96 key) |
| –3 | 1393643 | 1 | Keybutton B/M, Canada/Bilingual (92 key) |
| –3 | 1393468 | 1 | Keybutton B/M, U.K. (96 key) |
| –3 | 1393469 | 1 | Keybutton B/M, France |
| –3 | 1393470 | 1 | Keybutton B/M, Italy |
| –3 | 1393471 | 1 | Keybutton B/M, German |
| –3 | 1393472 | 1 | Keybutton B/M, Spain |
| –4 | 1392492 | 1 | Spacebar Kit |
| –5 | 1394999 | 1 | Keybutton B/M, Blank |
| –6 | 1392956 | 1 | Comb, Language Modification |

## Assembly 4: Keyboard Assembly, WW15

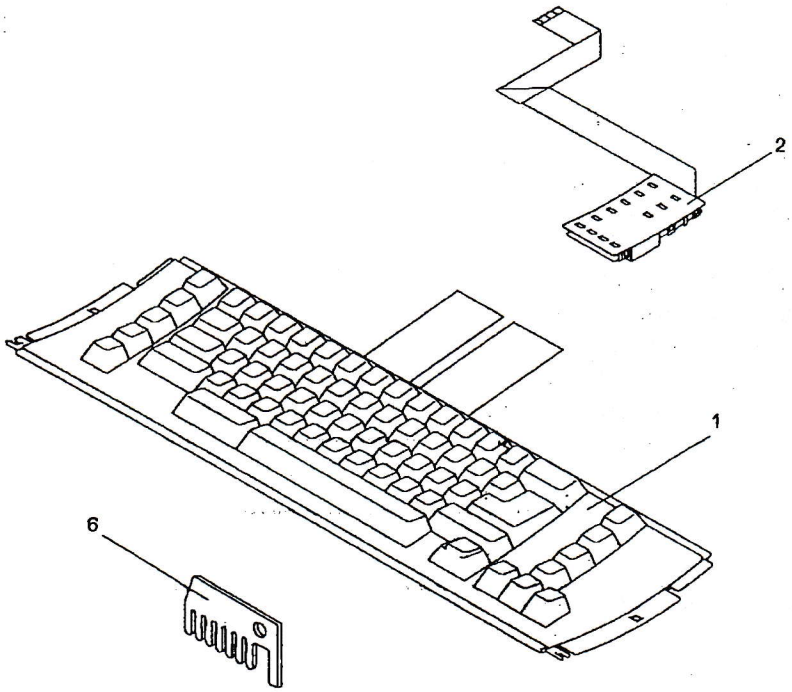

| Asm– Index | Part Number | Units | Description |
|---|---|---|---|
| 4–1 | 1383835 | 1 | Keyboard, U.S, Period |
| –1 | 1400179 | 1 | Keyboard, Arabic, Arda/French |
| –1 | 1400178 | 1 | Keyboard, Arabic, Souad/English |
| –1 | 1383853 | 1 | Keyboard, Brazil |
| –1 | 1383871 | 1 | Keyboard, Bulgaria |
| –1 | 1383838 | 1 | Keyboard, Canada, Bilingual |
| –1 | 1383869 | 1 | Keyboard, Czech Republic |
| –1 | 1383870 | 1 | Keyboard, Slovakia |
| –1 | 1383839 | 1 | Keyboard, Denmark |
| –1 | 1383837 | 1 | Keyboard, France/Belgium |
| –1 | 1383836 | 1 | Keyboard, Germany/Austria |
| –1 | 1383856 | 1 | Keyboard, Greece |
| –1 | 1400182 | 1 | Keyboard, Farsi/English |
| –1 | 1383872 | 1 | Keyboard, Hungary |
| –1 | 1383842 | 1 | Keyboard, Italy, Inches |
| –1 | 1383841 | 1 | Keyboard, Italy, Metric |
| –1 | 1383843 | 1 | Keyboard, Japan/English |
| –1 | 1400166 | 1 | Keyboard, Korean, Hangeul |
| –1 | 1383844 | 1 | Keyboard, Latin America, Period |
| –1 | 1383845 | 1 | Keyboard, Latin America, Comma |
| –1 | 1383846 | 1 | Keyboard, Netherlands |
| –1 | 1383847 | 1 | Keyboard, Norway |
| –1 | 1383857 | 1 | Keyboard, Phillippines |
| –1 | 1383860 | 1 | Keyboard, Poland |
| –1 | 1383848 | 1 | Keyboard, Portugal |
| –1 | 1383874 | 1 | Keyboard, Romania |
| –1 | 1383876 | 1 | Keyboard, Russian Cyrillic |
| –1 | 1383849 | 1 | Keyboard, Spain |
| –1 | 1383840 | 1 | Keyboard, Sweden/Finland |
| –1 | 1383850 | 1 | Keyboard, Switzerland-France |
| –1 | 1383851 | 1 | Keyboard, Switzerland-Germany |
| –1 | 1383854 | 1 | Keyboard, South Africa |
| –1 | 1400167 | 1 | Keyboard, Thailand/English |
| –1 | 1383855 | 1 | Keyboard, Turkey |
| –1 | 1383852 | 1 | Keyboard, United Kingdom |
| –1 | 1383875 | 1 | Keyboard, Yugoslavia (Latin/Cryillic) |
| –2 | 1431378 | 1 | Panel, Indicator, U.S. (Abbreviations) |
| –2 | 1431379 | 1 | Panel, Indicator, Non-U.S. (Symbols) |
| –2 | 1434338 | 1 | Panel, Indicator, Korean, Hangeul |
| –3 | 1396348 | 1 | Keybutton B/M, U.S. (92 key) |
| –3 | 1396346 | 1 | Keybutton B/M, U.S. (96 key) |
| –3 | 1396349 | 1 | Keybutton B/M, Canada/Bilingual (92 key) |
| –3 | 1396350 | 1 | Keybutton B/M, U.K. (96 key) |
| –3 | 1396351 | 1 | Keybutton B/M, France |
| –3 | 1396352 | 1 | Keybutton B/M, Italy |
| –3 | 1396353 | 1 | Keybutton B/M, German |
| –3 | 1396354 | 1 | Keybutton B/M, Spain |
| –4 | 1392492 | 1 | Spacebar Kit |
| –5 | 1392956 | 1 | Comb, Language Modification |

## Assembly 5: Keyboard Assembly, WW30

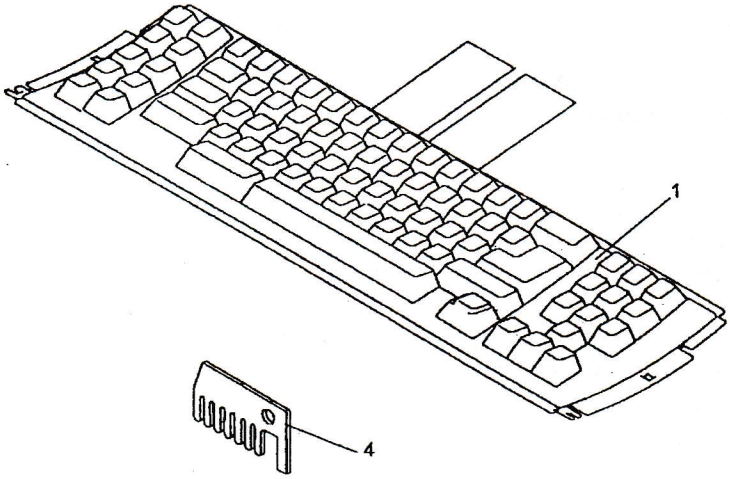

| Asm— Index | Part Number | Units | Description |
|---|---|---|---|
| 5—1 | 1384926 | 1 | Keyboard, U.S, Period |
| —1 | 1400153 | 1 | Keyboard, Brazil |
| —1 | 1400173 | 1 | Keyboard, Bulgaria |
| —1 | 1384930 | 1 | Keyboard, Canada, Bilingual |
| —1 | 1400169 | 1 | Keyboard, Czech Republic |
| —1 | 1400170 | 1 | Keyboard, Slovakia |
| —1 | 1384931 | 1 | Keyboard, Denmark |
| —1 | 1384929 | 1 | Keyboard, France/Belgium |
| —1 | 1384928 | 1 | Keyboard, France/Belgium - Dutch |
| —1 | 1384932 | 1 | Keyboard, Finland |
| —1 | 1384927 | 1 | Keyboard, Germany/Austria |
| —1 | 1384950 | 1 | Keyboard, Greece |
| —1 | 1400171 | 1 | Keyboard, Hungary |
| —1 | 1384934 | 1 | Keyboard, Italy, Inches |
| —1 | 1384935 | 1 | Keyboard, Italy, Metric |
| —1 | 1384937 | 1 | Keyboard, Japan/English |
| —1 | 1384938 | 1 | Keyboard, Latin America, Period |
| —1 | 1384939 | 1 | Keyboard, Latin America, Comma |
| —1 | 1383076 | 1 | Keyboard, Latin America/English, Period |
| —1 | 1384940 | 1 | Keyboard, Netherlands |
| —1 | 1384941 | 1 | Keyboard, Norway |
| —1 | 1400166 | 1 | Keyboard, Poland |
| —1 | 1384942 | 1 | Keyboard, Portugal |
| —1 | 1400174 | 1 | Keyboard, Romania |
| —1 | 1400156 | 1 | Keyboard, Russian Cyrillic |
| —1 | 1384943 | 1 | Keyboard, Spain |
| —1 | 1384933 | 1 | Keyboard, Sweden |
| —1 | 1384944 | 1 | Keyboard, Switzerland/France |
| —1 | 1384945 | 1 | Keyboard, Switzerland/Germany |
| —1 | 1384948 | 1 | Keyboard, South Africa |
| —1 | 1384949 | 1 | Keyboard, Turkey |
| —1 | 1384946 | 1 | Keyboard, United Kingdom |
| —1 | 1400168 | 1 | Keyboard, Yugoslavia (Latin/Cyrillic) |
| —2 | 1393644 | 1 | Keybutton B/M, U.S. (92 key) |
| —2 | 1393645 | 1 | Keybutton B/M, Canada/Bilingual (96 key) |
| —2 | 1393268 | 1 | Keybutton B/M, U.S. (96 key) |
| —2 | 1393474 | 1 | Keybutton B/M, France |
| —2 | 1393475 | 1 | Keybutton B/M, Italy |
| —2 | 1393476 | 1 | Keybutton B/M, German |
| —2 | 1393477 | 1 | Keybutton B/M, Spain |
| —2 | 1394999 | 1 | Keybutton B/M, Blank |
| —2 | 1393473 | 1 | Keybutton B/M, U.K. (96 key) |
| —3 | 1392492 | 1 | Spacebar Kit |
| —4 | 1392956 | 1 | Comb, Language Modification |

## Assembly 6: Keyboard Assembly, WW1500

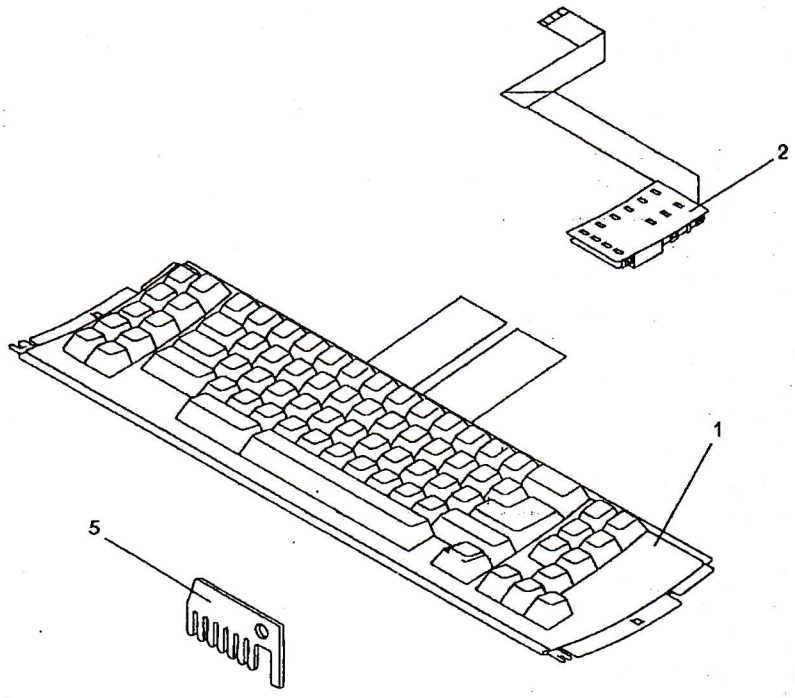

| Asm–Index | Part Number | Units | Description |
|---|---|---|---|
| 6–1 | 1400500 | 1 | Keyboard, U.S, Period |
| –1 | 1400519 | 1 | Keyboard, Brazil |
| –1 | 1400503 | 1 | Keyboard, Canada, Bilingual |
| –1 | 1400504 | 1 | Keyboard, Denmark |
| –1 | 1400502 | 1 | Keyboard, France/Belgium |
| –1 | 1400501 | 1 | Keyboard, Germany/Austria |
| –1 | 1400522 | 1 | Keyboard, Greece |
| –1 | 1400506 | 1 | Keyboard, Italy, Inches |
| –1 | 1400507 | 1 | Keyboard, Italy, Metric |
| –1 | 1400508 | 1 | Keyboard, Japan/English |
| –1 | 1400509 | 1 | Keyboard, Latin America, Period |
| –1 | 1400510 | 1 | Keyboard, Latin America, Comma |
| –1 | 1400513 | 1 | Keyboard, Norway |
| –1 | 1400511 | 1 | Keyboard, Phillippines |
| –1 | 1400514 | 1 | Keyboard, Portugal |
| –1 | 1400515 | 1 | Keyboard, Spain |
| –1 | 1400505 | 1 | Keyboard, Sweden |
| –1 | 1400520 | 1 | Keyboard, South Africa |
| –1 | 1400521 | 1 | Keyboard, Turkey |
| –1 | 1400518 | 1 | Keyboard, United Kingdom |
| –2 | 1371134 | 1 | Panel, Indicator, U.S. (Abbreviations) |
| –2 | 1371137 | 1 | Panel, Indicator, Non-U.S. (Symbols) |
| –3 | 1379739 | 1 | Keybutton B/M, U.S. (92 key) |
| –3 | 1379816 | 1 | Keybutton B/M, U.S. (96 key) |
| –3 | 1379817 | 1 | Keybutton B/M, Canada/Bilingual (92 key) |
| –3 | 1379822 | 1 | Keybutton B/M, U.K. (96 key) |
| –3 | 1379818 | 1 | Keybutton B/M, France |
| –3 | 1379820 | 1 | Keybutton B/M, Italy |
| –3 | 1379819 | 1 | Keybutton B/M, German |
| –3 | 1379821 | 1 | Keybutton B/M, Spain |
| –3 | 1394999 | 1 | Keybutton B/M, blank |
| –4 | 1392492 | 1 | Spacebar Kit |
| –5 | 1392956 | 1 | Comb, Language Modification |

## Assembly 7: Keyboard Assembly, WW3000

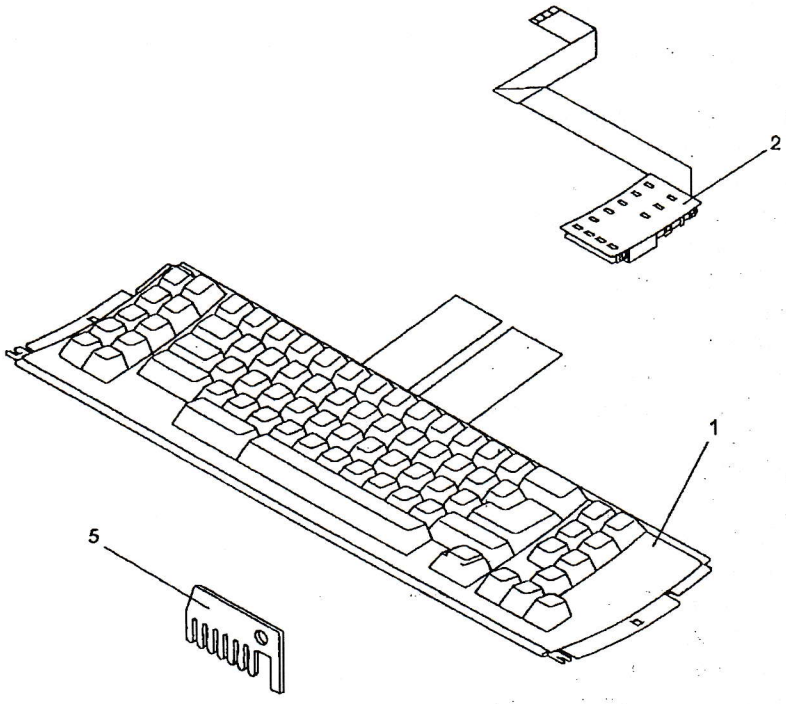

| Asm– Index | Part Number | Units | Description |
|---|---|---|---|
| 7–1 | 1400431 | 1 | Keyboard, U.S, Period |
| –1 | 1400450 | 1 | Keyboard, Brazil |
| –1 | 1400455 | 1 | Keyboard, Bulgaria |
| –1 | 1400434 | 1 | Keyboard, Canada, Bilingual |
| –1 | 1400456 | 1 | Keyboard, Czech Republic |
| –1 | 1400435 | 1 | Keyboard, Denmark |
| –1 | 1400433 | 1 | Keyboard, France/Belgium |
| –1 | 1400432 | 1 | Keyboard, Germany/Austria |
| –1 | 1400453 | 1 | Keyboard, Greece |
| –1 | 1400461 | 1 | Keyboard, Hungary |
| –1 | 1400437 | 1 | Keyboard, Italy, Inches |
| –1 | 1400438 | 1 | Keyboard, Italy, Metric |
| –1 | 1400439 | 1 | Keyboard, Japan/English |
| –1 | 1400440 | 1 | Keyboard, Latin America, Period |
| –1 | 1400441 | 1 | Keyboard, Latin America, Comma |
| –1 | 1400443 | 1 | Keyboard, Netherlands |
| –1 | 1400444 | 1 | Keyboard, Norway |
| –1 | 1400442 | 1 | Keyboard, Phillippines |
| –1 | 1400460 | 1 | Keyboard, Poland |
| –1 | 1400445 | 1 | Keyboard, Portugal |
| –1 | 1400458 | 1 | Keyboard, Romania |
| –1 | 1400454 | 1 | Keyboard, Russian Cyrillic |
| –1 | 1400457 | 1 | Keyboard, Slovakia |
| –1 | 1400446 | 1 | Keyboard, Spain |
| –1 | 1400436 | 1 | Keyboard, Sweden/Finland |
| –1 | 1400447 | 1 | Keyboard, Switzerland-France |
| –1 | 1400448 | 1 | Keyboard, Switzerland-Germany |
| –1 | 1400451 | 1 | Keyboard, South Africa |
| –1 | 1400452 | 1 | Keyboard, Turkey |
| –1 | 1400449 | 1 | Keyboard, United Kingdom |
| –1 | 1400459 | 1 | Keyboard, Yugoslavia (Latin/Cyrillic) |
| –1 | 1400540 | 1 | Keyboard, Adria (Latin) |
| –2 | 1364734 | 1 | Panel, Indicator, U.S. (Abbreviations) |
| –2 | 1364737 | 1 | Panel, Indicator, Non-U.S. (Symbols) |
| –3 | 1370689 | 1 | Keybutton B/M, U.S. (92 key) |
| –3 | 1379824 | 1 | Keybutton B/M, U.S. (96 key) |
| –3 | 1379825 | 1 | Keybutton B/M, Canada/Bilingual (92 key) |
| –3 | 1379830 | 1 | Keybutton B/M, U.K. (96 key) |
| –3 | 1379826 | 1 | Keybutton B/M, France |
| –3 | 1379828 | 1 | Keybutton B/M, Italy |
| –3 | 1379827 | 1 | Keybutton B/M, German |
| –3 | 1379829 | 1 | Keybutton B/M, Spain |
| –3 | 1394999 | 1 | Keybutton B/M, blank |
| –4 | 1392492 | 1 | Spacebar Kit |
| –5 | 1392956 | 1 | Comb, Language Modification |

## Assembly 8: Keyboard Assembly, WW35, WW3500

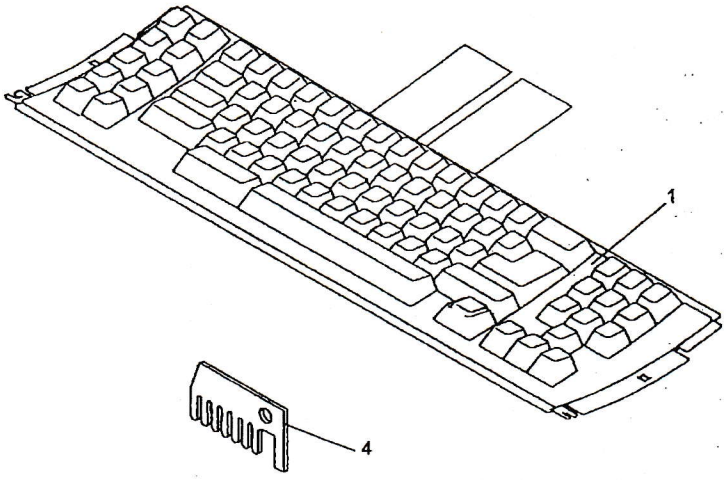

| Asm– Index | Part Number | Units | Description |
|---|---|---|---|
| 8–1 | 1400324 | 1 | Keyboard, U.S, Period |
| –1 | 1400345 | 1 | Keyboard, Brazil |
| –1 | 1400350 | 1 | Keyboard, Bulgaria |
| –1 | 1400328 | 1 | Keyboard, Canada, Bilingual |
| –1 | 1400351 | 1 | Keyboard, Czech Republic |
| –1 | 1400352 | 1 | Keyboard, Slovakia |
| –1 | 1400329 | 1 | Keyboard, Denmark |
| –1 | 1400327 | 1 | Keyboard, France/Belgium- French |
| –1 | 1400326 | 1 | Keyboard, France/Belgium - Dutch |
| –1 | 1400330 | 1 | Keyboard, Finland |
| –1 | 1400325 | 1 | Keyboard, Germany/Austria |
| –1 | 1400348 | 1 | Keyboard, Greece |
| –1 | 1400353 | 1 | Keyboard, Hungary |
| –1 | 1400332 | 1 | Keyboard, Italy, Inches |
| –1 | 1400333 | 1 | Keyboard, Italy, Metric |
| –1 | 1400334 | 1 | Keyboard, Japan/English |
| –1 | 1400335 | 1 | Keyboard, Latin America, Period |
| –1 | 1400336 | 1 | Keyboard, Latin America, Comma |
| –1 | 1400338 | 1 | Keyboard, Netherlands |
| –1 | 1400339 | 1 | Keyboard, Norway |
| –1 | 1400337 | 1 | Keyboard, Philippines |
| –1 | 1400356 | 1 | Keyboard, Poland |
| –1 | 1400340 | 1 | Keyboard, Portugal |
| –1 | 1400354 | 1 | Keyboard, Romania |
| –1 | 1400349 | 1 | Keyboard, Russian Cyrillic |
| –1 | 1400341 | 1 | Keyboard, Spain |
| –1 | 1400331 | 1 | Keyboard, Sweden |
| –1 | 1400342 | 1 | Keyboard, Switzerland/France |
| –1 | 1400343 | 1 | Keyboard, Switzerland/Germany |
| –1 | 1400346 | 1 | Keyboard, South Africa |
| –1 | 1400347 | 1 | Keyboard, Turkey |
| –1 | 1400344 | 1 | Keyboard, United Kingdom |
| –1 | 1400355 | 1 | Keyboard, Yugoslavia (Latin/Cyrillic) |
| –1 | 1400541 | 1 | Keyboard, Adria (Latin) |
| –2 | 1339126 | 1 | Keybutton B/M, U.S. (92 key) |
| –2 | 1339127 | 1 | Keybutton B/M, Canada/Bilingual (96 key) |
| –2 | 1339128 | 1 | Keybutton B/M, U.S. (96 key) |
| –2 | 1339129 | 1 | Keybutton B/M, France (96 Key) |
| –2 | 1339130 | 1 | Keybutton B/M, Italy (96 Key) |
| –2 | 1339131 | 1 | Keybutton B/M, German (96 Key) |
| –2 | 1339132 | 1 | Keybutton B/M, Spain (96 Key) |
| –2 | 1339133 | 1 | Keybutton B/M, U.K. (96 Key) |
| –3 | 1392492 | 1 | Spacebar Kit |
| –4 | 1392956 | 1 | Comb, Language Modification |

## Assembly 9: Keyboard Assembly, WW50, WW70, WW5000, WW7000

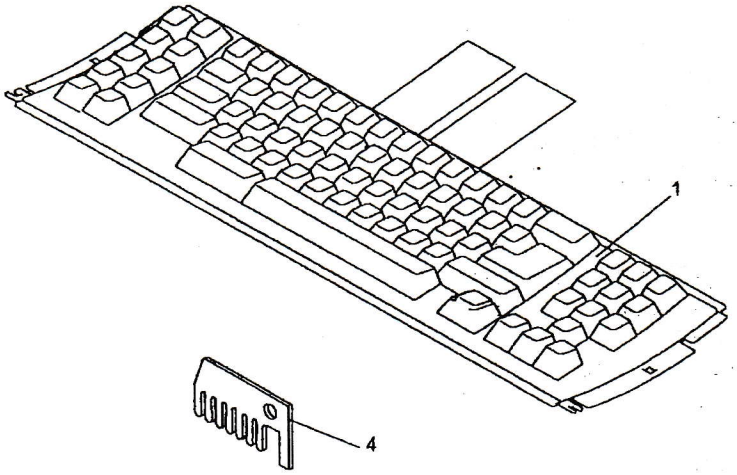

| Asm— Index | Part Number | Units | Description |
|---|---|---|---|
| 9—1 | 1384862 | 1 | Keyboard, U.S, Period, WW50, WW5000 |
| —1 | 1400157 | 1 | Keyboard, Brazil, WW50, WW5000 |
| —1 | 1384863 | 1 | Keyboard, Germany/Austria, WW50, WW5000 |
| —1 | 1384864 | 1 | Keyboard, France/Belgian-Dutch, WW50, WW5000 |
| —1 | 1384865 | 1 | Keyboard, France/Belgian-French, WW50, WW5000 |
| —1 | 1384866 | 1 | Keyboard, Canada, Bilingual, WW50, WW5000 |
| —1 | 1384867 | 1 | Keyboard, Denmark, WW50, WW5000 |
| —1 | 1384868 | 1 | Keyboard, Finland, WW50, WW5000 |
| —1 | 1384873 | 1 | Keyboard, Japan/English, WW50, WW5000 |
| —1 | 1383078 | 1 | Keyboard, Philippines, WW50, WW5000 |
| —1 | 1384869 | 1 | Keyboard, Sweden, WW50, WW5000 |
| —1 | 1384870 | 1 | Keyboard, Italy, Inches, WW50, WW5000 |
| —1 | 1384871 | 1 | Keyboard, Italy, Metric, WW50, WW5000 |
| —1 | 1384874 | 1 | Keyboard, Latin America, Period, WW50, WW5000 |
| —1 | 1384875 | 1 | Keyboard, Latin America, Comma, WW50, WW5000 |
| —1 | 1384876 | 1 | Keyboard, Netherlands, WW50, WW5000 |
| —1 | 1384877 | 1 | Keyboard, Norway, WW50, WW5000 |
| —1 | 1384878 | 1 | Keyboard, Portugal, WW50, WW5000 |
| —1 | 1384879 | 1 | Keyboard, Spain, WW50, WW5000 |
| —1 | 1384880 | 1 | Keyboard, Swiss/French, WW50, WW5000 |
| —1 | 1384881 | 1 | Keyboard, Swiss/German, WW50, WW5000 |
| —1 | 1384883 | 1 | Keyboard, South Africa, WW50, WW5000 |
| —1 | 1384884 | 1 | Keyboard, Turkey, WW50, WW5000 |
| —1 | 1384885 | 1 | Keyboard, Greece, WW50, WW5000 |
| —1 | 1384886 | 1 | Keyboard, United Kingdom, WW50 , WW5000 |
| —1 | 1384878 | 1 | Keyboard, Latin America/English, Period, WW50, WW5000 |
| —1 | 1383032 | 1 | Keyboard, U.S, Period, WW70 |
| —1 | 1400531 | 1 | Keyboard, U.S, Period, WW7000 |
| —1 | 1400536 | 1 | Keyboard, United Kingdom, WW70 |
| —1 | 1400532 | 1 | Keyboard, United Kingdom, WW7000 |
| —2 | 1393646 | 1 | Keybutton B/M, U.S. (92 key), WW50, WW5000 |
| —2 | 1393270 | 1 | Keybutton B/M, U.S. (96 key), WW50, WW5000 |
| —2 | 1393647 | 1 | Keybutton B/M, Canada, Bilingual, (96 key), WW50, WW5000 |
| —2 | 1393478 | 1 | Keybutton B/M, United Kingdom (96 key), WW50, WW5000 |
| —2 | 1393479 | 1 | Keybutton B/M, France (96 key), WW50,WW5000 |
| —2 | 1393480 | 1 | Keybutton B/M, Italy (96 key), WW50, WW5000 |
| —2 | 1393481 | 1 | Keybutton B/M, Germany (96 key), WW50, WW5000 |
| —2 | 1393482 | 1 | Keybutton B/M, Spain (96 key), WW50, WW5000 |
| —2 | 1379813 | 1 | Keybutton B/M, U.S. (92 key), WW7000 |
| —2 | 1394059 | 1 | Keybutton B/M, U.S. (92 key), WW70 |
| —2 | 1394999 | 1 | Keybutton B/M, Blank |
| —3 | 1392492 | 1 | Spacebar Kit |
| —4 | 1392956 | 1 | Comb, Language Modification |

## Assembly 10: Paperfeed Assembly

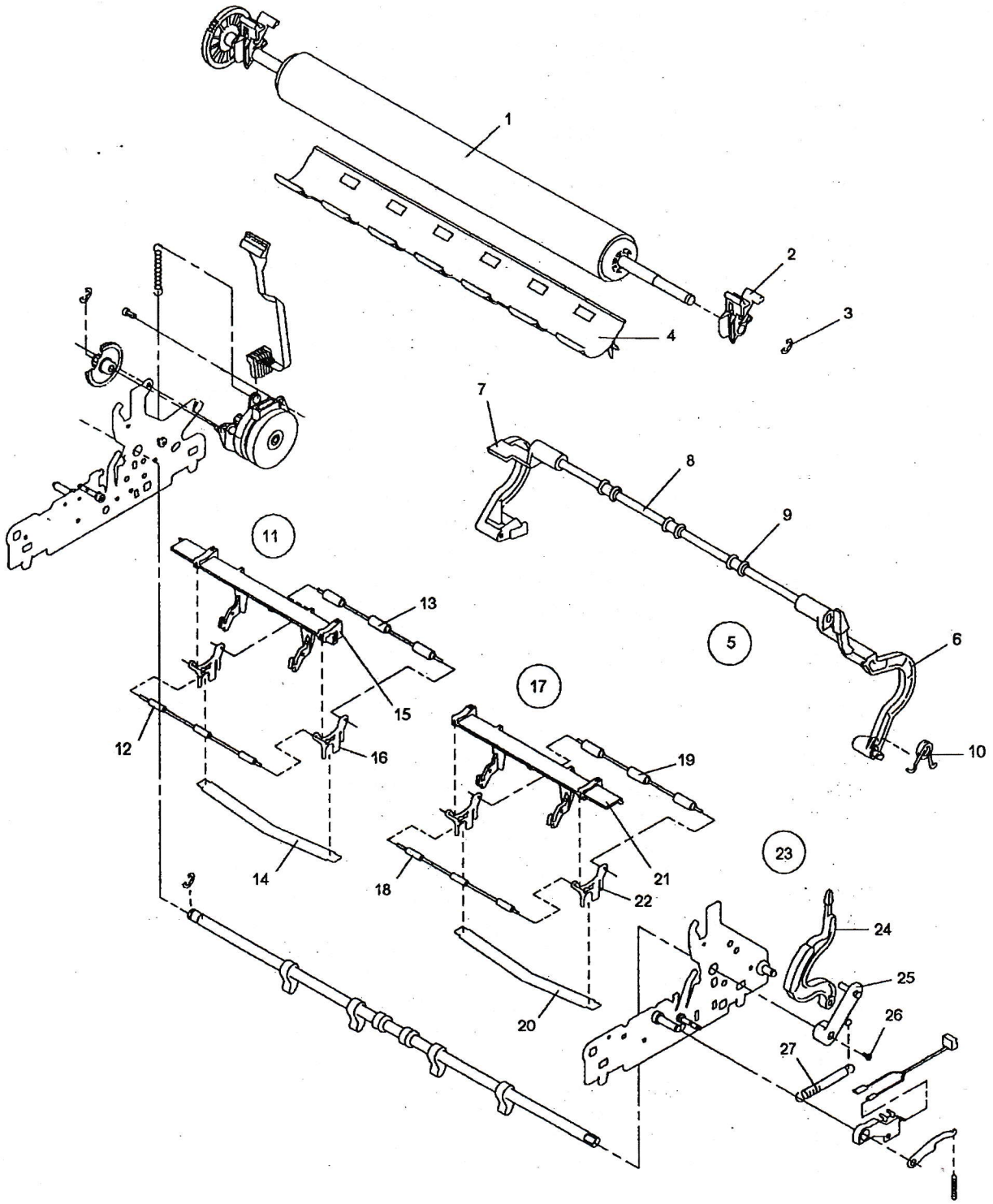

| Asm – Index | Part Number | Units | Description |
|---|---|---|---|
| 10 – 1 | 1384809 | 1 | Platen<br>Also Order Index -2, -3, and -37 |
| – 2 | 1339074 | 2 | • Latch, Platen |
| – 3 | 1126832 | 1 | • Retainer, Platen Latch |
| – 4 | 1342482 | 1 | Deflector |
| – 5 | 1384921 | 1 | Paper Bail Asm (Black Levers) |
| – 5 | 1400389 | 1 | Paper Bail Asm (Blue Levers) |
| – 6 | 1430498 | 1 | • Lever, RH (Black) |
| – 7 | 1362388 | 1 | • Lever, LH(Black) |
| – 6 | 1364840 | 1 | • Lever, RH (Blue) |
| – 7 | 1364841 | 1 | • Lever, LH(Blue) |
| – 8 | 1337201 | 1 | • Shaft |
| – 9 | 1440671 | 3 | • Roller |
| – 10 | 1339226 | 2 | • Spring, Paper Bail<br>Also Part of Parts Packet 1384497 |
| – 11 | 1384145 | 1 | Feed Roller Asm, LH |
| – 12 | 1432603 | 1 | • Feed Roller, Front |
| – 13 | 1432606 | 1 | • Feed Roller, Rear |
| – 14 | 1337194 | 1 | • Spring, Feed Roller Bias |
| – 15 | 1339034 | 1 | • Feed Roller Asm Support, LH, |
| – 16 | 1337037 | 2 | • Support, Feed Roller |
| – 17 | 1384146 | 1 | Feed Roller Asm, RH |
| – 18 | 1432603 | 1 | • Feed Roller, Front |
| – 19 | 1432606 | 1 | • Feed Roller, Rear |
| – 20 | 1337194 | 1 | • Spring, Feed Roller Bias |
| – 21 | 1339033 | 1 | • Feed Roller Asm Support, RH |
| – 22 | 1337037 | 2 | • Support, Feed Roller |
| – 23 | 1384047 | 1 | Lever, Paper Release Asm (Black) |
| – 23 | 1400390 | 1 | Lever, Paper Release Asm(Blue) |
| – 24 | 1337055 | 1 | • Lever, Paper Release (Black) |
| – 24 | 1364842 | 1 | • Lever, Paper Release(Blue) |
| – 25 | 1339057 | 1 | • Bellcrank, Paper Release Asm |
| – 26 | 1624874 | 1 | • Screw, Paper Release Bellcrank<br>Also Part of Parts Packet 1384498 |
| – 27 | 1342481 | 1 | • Spring, Paper Release Bellcrank<br>Also Part of Parts Packet 1384497 |

**Assembly 10: (continued)**

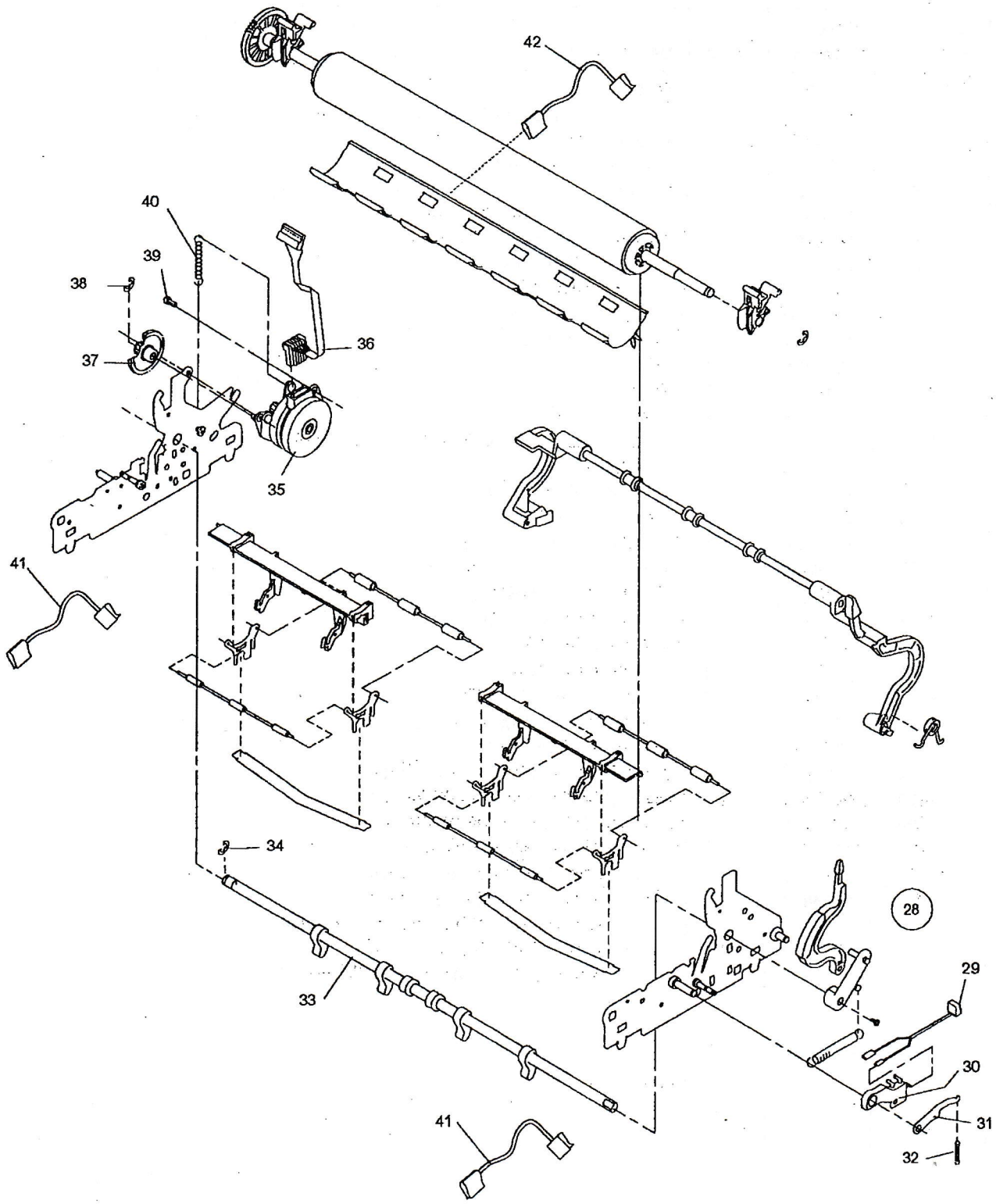

| Asm—Index | Part Number | Units | Description |
|---|---|---|---|
| 10—28 | 1384989 | 1 | Switch Asm,SAPI, WW3 |
| —28 | 1384810 | 1 | Switch Asm,SAPI, WW6, WW10, WW15, WW30, WW35, WW50, WW70, WW1500, WW3000, WW3500, WW5000, WW7 |
| —29 | 1341681 | 1 | • Cable,SAPI, WW3 |
| —29 | 1430118 | 1 | • Cable,SAPI, WW6, WW10, WW15, WW30, WW35, WW50, WW70, WW1500, WW3000, WW3500, WW5000, WW7000 |
| —30 | 1430489 | 1 | • Switch,SAPI |
| —31 | 1430492 | 1 | • Lever,Override |
| —32 | 1430491 | 1 | • Spring,Override<br>Also Part of Parts Packet 1384861 |
| —33 | 1337884 | 1 | Shaft,Paperfeed Cam |
| —34 | 1126835 | 1 | Retainer,Paper Release Shaft<br>Also Part of Parts Packet 1384449 |
| —35 | 1384829 | 1 | Motor Asm,Paperfeed<br>Includes Index -37 and -38 |
| —35 | 1384957 | 1 | Motor Asm,Paperfeed, Court Reporter<br>Includes Index -37 and -38 |
| —36 | 1341678 | 1 | Cable, Paperfeed Motor, WW3/6 |
| —36 | 1431373 | 1 | Cable, Paperfeed Motor, WW10 and WW15 with DCA Function Board |
| —36 | 1430113 | 1 | Cable, Paperfeed Motor, WW10 and WW15 without DCA Function Board, WW30, WW35, WW50, WW70, WW1500, WW3000, WW3500, WW5000, WW7000 |
| —37 | 1337033 | 1 | Gear,Intermediate<br>Also Order Index -1 |
| —37 | 1356655 | 1 | Gear,Intermediate, Metric<br>Also Order Index -1 |
| —37 | 1362069 | 1 | Gear,Intermediate, Court Reporter<br>Also Order Index -1 |
| —38 | 1126831 | 1 | Retainer,Index Idler Gear<br>Also Part of Parts Packet 1384499 |
| —39 | 1339099 | 3 | Screw,Index Motor Mtg |
| —40 | 1339180 | 1 | Spring,Index Motor Bias<br>Also Part of Parts Packet 1384497 |
| —41 | 1319133 | 1 | Ground Strap, Index Motor |
| —42 | 1622401 | 1 | Nut, Ground Strap Mtg |
| —43 | 1431354 | 1 | Ground Strap, Frame to Ground Plane |

## Assembly 11: Electronics, WW3/6

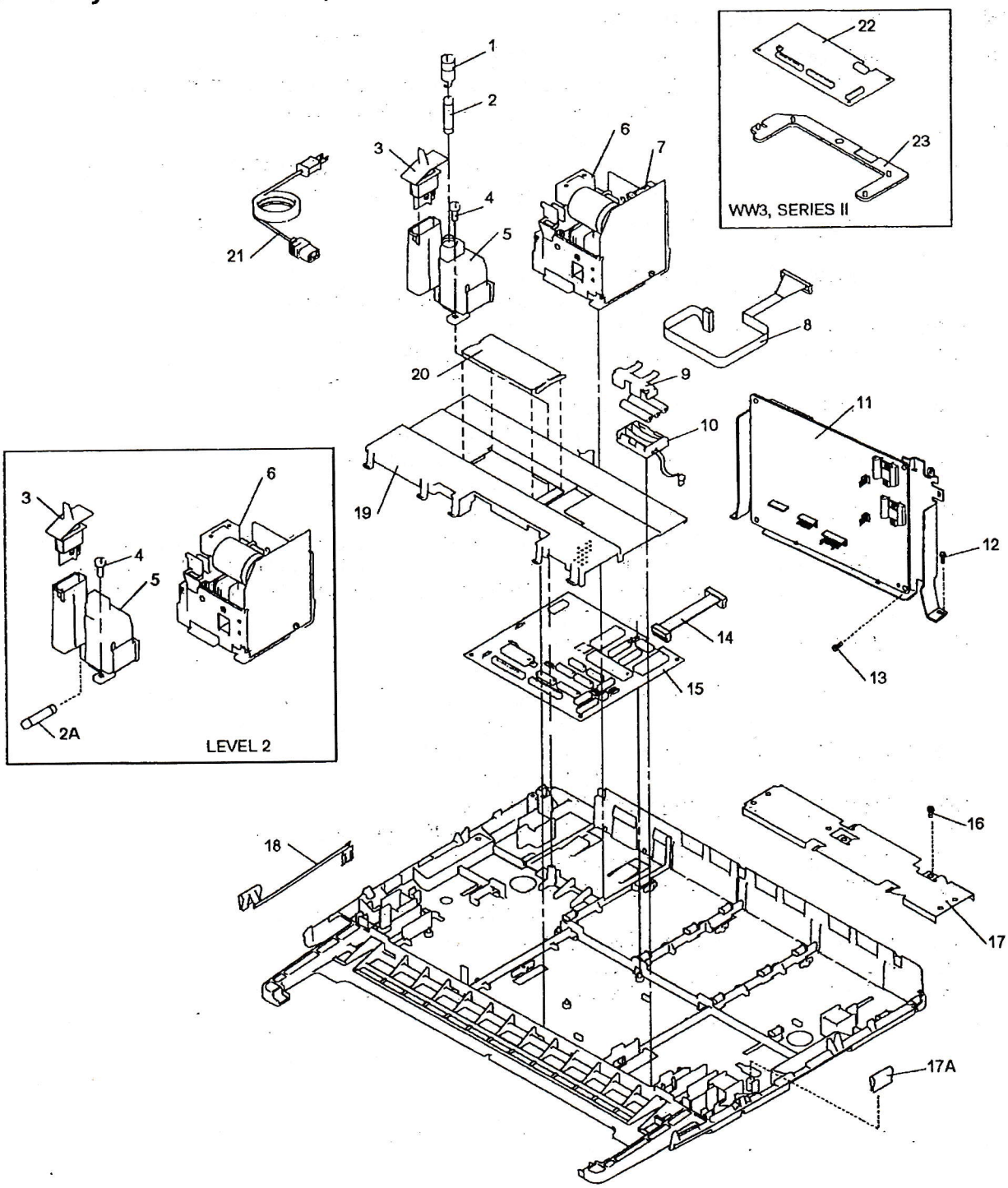

| Asm— Index | Part Number | Units | Description |
|---|---|---|---|
| 11—1 | 1383079 | 1 | Holder,Fuse |
| —2 | 0303549 | 1 | Fuse,Primary 1 Amp, Slow Blow, Long, Non-Universal P/S |
| —2A | 1181167 | 1 | Fuse,Primary 1 Amp, Slow Blow, Short, Non-Universal P/S |
| —3 | 1384922 | 1 | Switch Asm,On/Off |
| —4 | 1623641 | 2 | Screw,Switch Tower Mtg |
| —5 | 1430361 | 1 | Switch Tower, |
| —6 | 1400290 | 1 | Power Supply, Universal Fuseless Includes Item 3 and 5 |
| —7 | 0855252 | 1 | Fuse, +5V 2 Amp, Normal Blow, Non-Universal P/S |
| —7 | 1384958 | 1 | Fuse, +5V,630ma, Time Lag, Non U.S., Non-Universal P/S |
| —8 | 1433035 | 1 | Cable,Power Supply to Printer Brd |
| —9 | 1342009 | 1 | Holder,Battery, WW6 |
| —10 | 1337966 | 1 | Battery Pack, WW6 |
| —11 | 1383365 | 1 | Board Asm,Printer, WW3 |
| —11 | 1383366 | 1 | Board Asm,Printer, WW6 |
| —12 | 1623630 | 1 | Screw,Printer Board Brk to Plate Mtg |
| —13 | 1623622 | 1 | Screw,Printer Board to Bracket Mtg |
| —14 | 1433013 | 1 | Cable,System, WW3 |
| —14 | 1433125 | 1 | Cable,System, WW6 |
| —15 | 1383063 | 1 | Board Asm,Function, WW6, All except Hungary SUBTO 1400151 $137 EXCH $99 |
| —15 | 1400151 | 1 | Board Asm,Function, WW6, Hungary |
| —15 | 1383117 | 1 | Board Asm, Function, WW3 |
| —16 | 1206717 | 1 | Screw,Printer Board Plate to Bottom Cover Mtg |
| —17 | 1433028 | 1 | Plate,Printer Board Mounting |
| —17A | 1432479 | 1 | Ground Clip |
| —18 | 1430379 | 1 | Ground Strap |
| —19 | 1430114 | 1 | Electronic Board Cover |
| —20 | 1430119 | 1 | Cover,Carrier Cable |
| —21 | 1430317 | 1 | Line Cord, U.S, 6 Feet |
| —21 | 1430310 | 1 | Line Cord, U.S, 8 Feet |
| —21 | 1430328 | 1 | Line Cord, Australia/New Zealand, 6 Feet |
| —21 | 1430311 | 1 | Line Cord, Australia/New Zealand, 8 Feet |
| —21 | 1430330 | 1 | Line Cord, Europe, 6 Feet |
| —21 | 1430313 | 1 | Line Cord, Europe, 8 Feet |
| —21 | 1430331 | 1 | Line Cord, Israel, 6 Feet |
| —21 | 1430314 | 1 | Line Cord, Israel, 8 Feet |
| —21 | 1430318 | 1 | Line Cord, Italy, 6 Feet |
| —21 | 1430334 | 1 | Line Cord, Italy, 8 Feet |
| —21 | 1430333 | 1 | Line Cord, South Africa, 6 Feet |
| —21 | 1430316 | 1 | Line Cord, South Africa, 8 Feet |
| —21 | 1430329 | 1 | Line Cord, United Kingdom, 6 Feet |
| —21 | 1430312 | 1 | Line Cord, United Kingdom, 8 Feet |
| —21 | 1430332 | 1 | Line Cord, Switzerland, 6 Feet |
| —21 | 1430315 | 1 | Line Cord, Switzerland, 8 Feet |
| —22 | 1383117 | 1 | Board Asm,Function, WW3 |
| —23 | 1433022 | 1 | Positioner,Function Board, WW3 |

## Assembly 12: Electronics WW10, WW15, WW30, WW35, WW50, WW70,

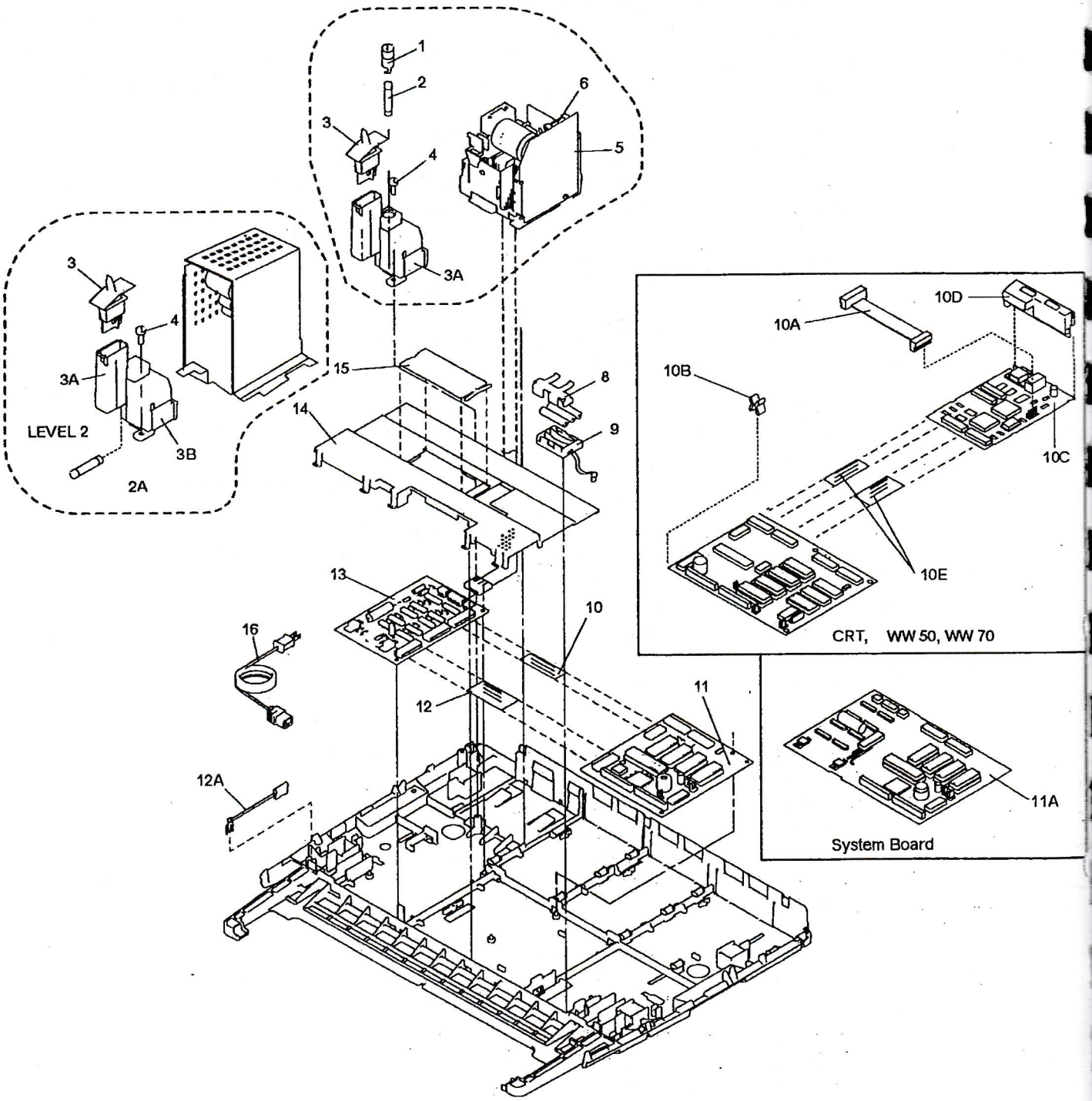

| Asm— Index | Part Number | Units | Description |
|---|---|---|---|
| 12—1 | 1383079 | 1 | Cap,Fuse |
| —2 | 0303549 | 1 | Fuse,Primary 1 Amp, Slow Blow |
| —2A | 1181167 | 1 | Fuse,Primary 1 Amp, Slow Blow, Short |
| —3 | 1384922 | 1 | Switch Asm,On/Off |
| —3A | 1430361 | 1 | Switch Tower, W/O Inlet Coupler |
| —3B | 1400289 | 1 | Inlet Coupler<br>For universal power supply only. |
| —4 | 1623641 | 2 | Screw, Switch Tower Mtg. |
| —5 | 1400290 | 1 | Power Supply, Universal Fuseless Includes Item 3, 3A and 3B |
| —6 | 0855252 | 1 | • Fuse, +5V 2 Amp, Normal Blow, Non-Universal P/S |
| —2 | 1384958 | 1 | • Fuse, 630 ma, Timelag, Non-U.S., Non-Universal P/S (Primary) |
| —8 | 1342009 | 1 | Holder,Battery |
| —9 | 1337966 | 1 | Battery Pack, 3 batteries |
| —9 | 1181851 | 1 | Battery Pack, 2 batteries (DCA), long leads |
| —9 | 1429172 | 1 | Battery Pack, 2 batteries, short leads |
| —10 | 1430111 | 1 | Cable,Function/Drive 16 Position, Two Board Machines |
| —10A | 1432217 | 1 | Cable,Power Supply to CRT Display |
| —10B | 1432198 | 2 | Clip,Mtg |
| —10C | 1384888 | 1 | Board,CRT, WW50, WW70 |
| —10D | 1431299 | 1 | Cover,CRT Board, WW50, WW70 |
| —10E | 1430110 | 2 | Cable |
| —11A | 1383376 | 1 | Board Asm, Function, Brazil, SMT, WW10 |
| —11A | 1383409 | 1 | Board Asm, Function, Thailand, SMT, WW10 |
| —11 | | 1 | Board Asm, Function, U.S. Spell Check, Two Board, WW10<br>No longer available—Replace both 11 and 13 with P/N 1383374 or P/N 1383375. |
| —11A | 1383375 | 1 | Board Asm, Function, without Spell Check, SMT, WW10, (6783-001, 6783-002) |
| —11A | 1383904 | 1 | Board Asm, Function, U.S. Spell Check, DCA, WW10<br>Remove module from U3 and plug on new board. |
| —11A | 1383374 | 1 | Board Asm, Function, U.S. Spell Check, SMT, WW10, 6783-001, 6783-002 |
| —11A | 1400395 | 1 | Board Asm, Function, U.S. Spell Check, WW10, 6783-005, 6783-006<br>Remove module from U3 and plug on new board. 6783-001, 6783-002 |
| —11A | 1400226 | 1 | Board Asm, Function, Brazil, DCA, WW15 |
| —11A | 1400534 | 1 | Board Asm, Function, Brazil, WW15/With Portuguese (HMC)(Spell Check) |
| —11A | 1400165 | 1 | Board Asm, Function, Korea, SMT, WW15 |
| —11A | 1400164 | 1 | Board Asm, Function, Thailand, DCA, WW15 |
| —11A | 1400397 | 1 | Board Asm, Function, Thailand, SMT, WW15 |
| —11A | 1400396 | 1 | Board Asm, Function, except Thai, Korea, SMT, WW15<br>Remove module from U3 and plug on new board. |
| —11A | 1383807 | 1 | Board Asm, Function, U.S. with Spell Check, WW15 215 X175<br>Remove module from U3 and plug on new board. |
| —11 | 1400154 | 1 | Board Asm, Function, Brazil, Two Board, WW30 |
| —11 | 1383377 | 1 | Board Asm, Function, U.S. with Spell Check II, Two Board, WW30 → 1400579 |
| —11 | 1383378 | 1 | Board Asm, Function, without Spell Check, Two Board, WW30 $180<br>Remove module from U801, and/or U700, and/or U201 and plug on new board. $90 EXCH |
| —11 | 1400288 | 1 | Board Asm, Function, ROECE, WW35 |

**Assembly 12: (continued)**

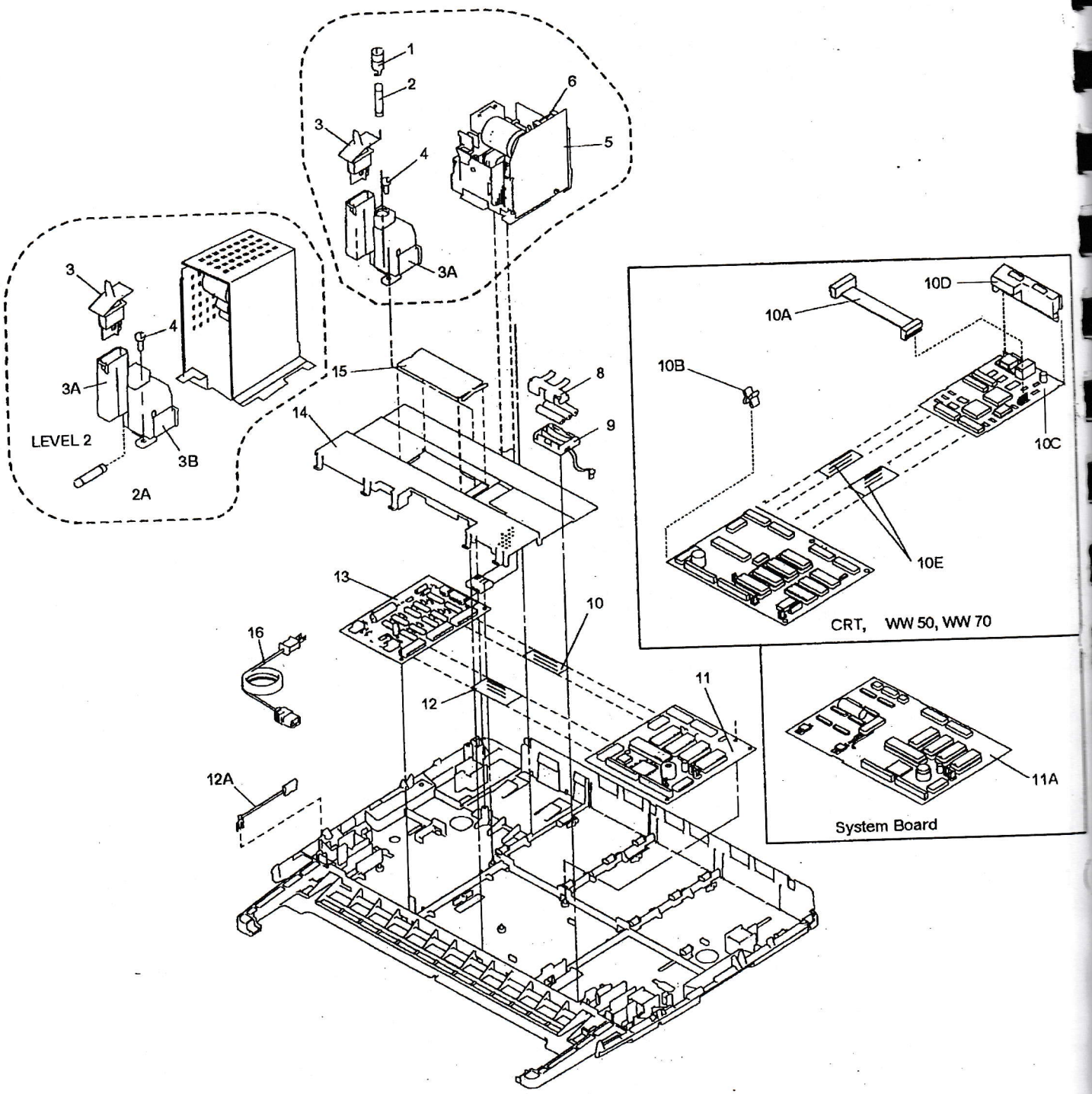

1400603 #245 EXCH $199

| Asm–Index | Part Number | Units | Description |
|---|---|---|---|
| 12–11 | ~~1400285~~ | 1 | Board Asm, Function, U.S./Brazil with U.S. Spell Check II, WW35 |
| –11 | 1400287 | 1 | Board Asm, Function, without Spell Check or Spell Check II, WW35 Remove module from U3 and plug on new board. |
| –11A | 1400370 | 1 | Board Asm, Function, Brazil, Single Board, WW50 |
| –11 | 1400155 | 1 | Board Asm, Function, Brazil, Two Board, WW50 |
| –11 | 1383379 | 1 | Board Asm, Function, U.S. with Spell Check II, Two Board, WW50 |
| –11A | 1400368 | 1 | Board Asm, Function, U.S. with Spell Check II, Single Board, WW50 |
| –11 | 1383380 | 1 | Board Asm, Function, without Spell Check, Two Board, WW50 Remove module from U801, and/or U700, and/or U201 and plug on new board. |
| –11A | 1400369 | 1 | Board Asm, Function, without Spell Check or Spell Check II, Single Board, WW50 |
| –11 | 1400158 | 1 | Board Asm, Function, U.S. with Spell Check II, Two Board, WW70 |
| –11A | 1400385 | 1 | Board Asm, WW70 U.K. single board |
| –12 | 1430110 | 1 | Cable,Function/Drive 22 Position, Two Board Machines |
| –12A | 1181097 | 2 | Ground Strap, Frame to Keyboard |
| –13 | 1384815 | 1 | Board Asm, Motor Control, Two Board Machines, WW10, WW30, WW50, WW70 |
| –14 | 1431375 | 1 | Shield,Board, Single Board Machines |
| –14 | 1430114 | 1 | Shield, Board, Two Board Machines |
| –15 | 1431376 | 1 | Cover,Carrier Cable, Single Board Machines |
| –15 | 1430119 | 1 | Cover, Carrier Cable, Two Board Machines |
| –16 | 1430317 | 1 | Line Cord, U.S, 6 Feet |
| –16 | 1430310 | 1 | Line Cord, U.S, 8 Feet |
| –16 | 1430328 | 1 | Line Cord, Australia/New Zealand, 6 Feet |
| –16 | 1430311 | 1 | Line Cord, Australia/New Zealand, 8 Feet |
| –16 | 1430330 | 1 | Line Cord, Europe, 6 Feet |
| –16 | 1430313 | 1 | Line Cord, Europe, 8 Feet |
| –16 | 1430331 | 1 | Line Cord, Israel, 6 Feet |
| –16 | 1430314 | 1 | Line Cord, Israel, 8 Feet |
| –16 | 1430318 | 1 | Line Cord, Italy, 6 Feet |
| –16 | 1430334 | 1 | Line Cord, Italy, 8 Feet |
| –16 | 1430333 | 1 | Line Cord, South Africa, 6 Feet |
| –16 | 1430316 | 1 | Line Cord, South Africa, 8 Feet |
| –16 | 1430329 | 1 | Line Cord, United Kingdom, 6 Feet |
| –16 | 1430312 | 1 | Line Cord, United Kingdom, 8 Feet |
| –16 | 1430332 | 1 | Line Cord, Switzerland, 6 Feet |
| –16 | 1430315 | 1 | Line Cord, Switzerland, 8 Feet |

## Assembly 13: Electronics WW1500, WW3000, WW3500, WW5000, WW7000

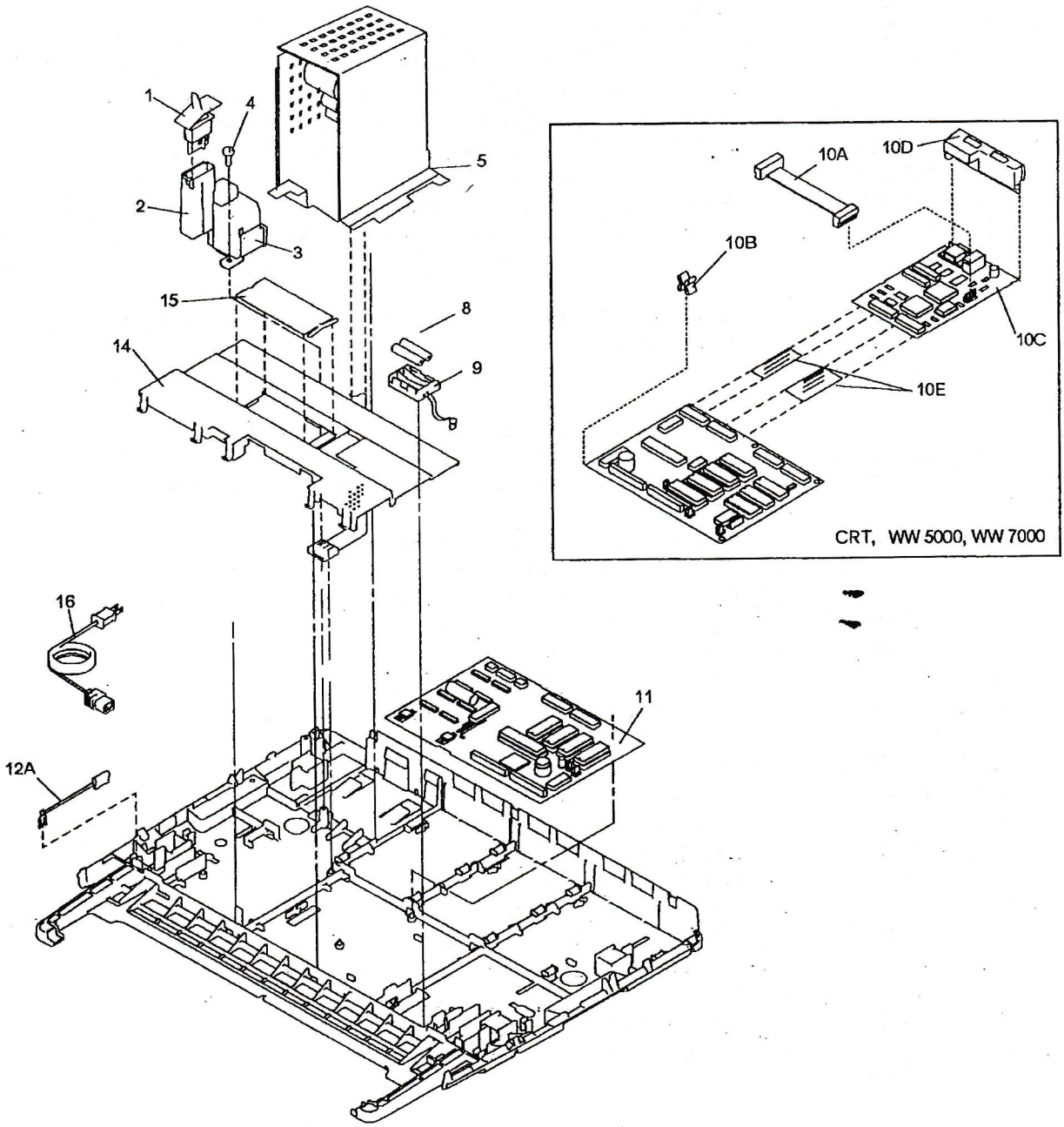

| Asm– Index | Part Number | Units | Description |
|---|---|---|---|
| 13–1 | 1384922 | 1 | Switch Asm,On/Off |
| –2 | 1430361 | 1 | Switch Tower, W/O Inlet Coupler |
| –3 | 1430289 | 1 | Inlet Coupler |
| –4 | 1623641 | 2 | Screw, Switch Tower Mtg. |
| –5 | 1400290 | 1 | Power Supply, Universal Fuseless includes items 1, 2, and 3 |
| –9 | 1429172 | 1 | Battery Pack, 2 batteries |
| –10A | 1432217 | 1 | Cable,Power Supply to CRT Display |
| –10B | 1432198 | 2 | Clip,Mtg |
| –10C | 1384888 | 1 | Board,CRT, WW5000, WW7000 |
| –10D | 1431299 | 1 | Cover,CRT Board, WW5000, WW7000 |
| –10E | 1430110 | 2 | Cable |
| –11 | 1400405 | 1 | Board Asm, Function, except Thai, Korea, SMT, WW1500 → 215 Remove module from U800 and plug on new board. |
| –11 | 1400288 | 1 | Board Asm, Function, ROECE, WW3500 |
| –11 | 1400285 | 1 | Board Asm, Function, U.S./Brazil with U.S. Spell Check II, WW3500 265 205 |
| –11 | 1400222 | 1 | Board Asm, Function, Non-Spain Spanish with Spell Check II, WW3500 |
| –11 | 1400287 | 1 | Board Asm, Function, without Spell Check or Spell Check II, WW3500 Remove module from U3 and plug on new board. |
| –11 | 1400370 | 1 | Board Asm, Function, Brazil, WW5000 |
| –11 | 1400368 | 1 | Board Asm, Function, U.S. with Spell Check II, WW5000 |
| –11 | 1400369 | 1 | Board Asm, Function, without Spell Check or Spell Check II, WW5000 Remove module from U3 and plug on new board. |
| –11 | ~~1400399~~ 1400603 | 1 | Board Asm, Function, U.S. Spell Check, WW3000 → $245 Cost Remove module from U3 and plug on new board. $199 EXCH |
| –11 | 1400407 | 1 | Board Asm, Function, U.S. with Spell Check II, WW7000 325 250EXCH 11/95 |
| –11 | 1400408 | 1 | Board Asm, Function, U.K. with Spell Check II, WW7000 |
| –12A | 1181097 | 2 | Ground Strap, Frame to Keyboard |
| –14 | 1431375 | 1 | Shield,Board, |
| –15 | 1431376 | 1 | Cover,Carrier Cable, Single Board Machines |
| –16 | 1430317 | 1 | Line Cord, U.S, 6 Feet |
| –16 | 1430310 | 1 | Line Cord, U.S, 8 Feet |
| –16 | 1430328 | 1 | Line Cord, Australia/New Zealand, 6 Feet |
| –16 | 1430311 | 1 | Line Cord, Australia/New Zealand, 8 Feet |
| –16 | 1430330 | 1 | Line Cord, Europe, 6 Feet |
| –16 | 1430313 | 1 | Line Cord, Europe, 8 Feet |
| –16 | 1430331 | 1 | Line Cord, Israel, 6 Feet |
| –16 | 1430314 | 1 | Line Cord, Israel, 8 Feet |
| –16 | 1430318 | 1 | Line Cord, Italy, 6 Feet |
| –16 | 1430334 | 1 | Line Cord, Italy, 8 Feet |
| –16 | 1430333 | 1 | Line Cord, South Africa, 6 Feet |
| –16 | 1430316 | 1 | Line Cord, South Africa, 8 Feet |
| –16 | 1430329 | 1 | Line Cord, United Kingdom, 6 Feet |
| –16 | 1430312 | 1 | Line Cord, United Kingdom, 8 Feet |
| –16 | 1430332 | 1 | Line Cord, Switzerland, 6 Feet |
| –16 | 1430315 | 1 | Line Cord, Switzerland, 8 Feet |

Power Wire 1500
1400601

## Assembly 14: Carrier Assembly

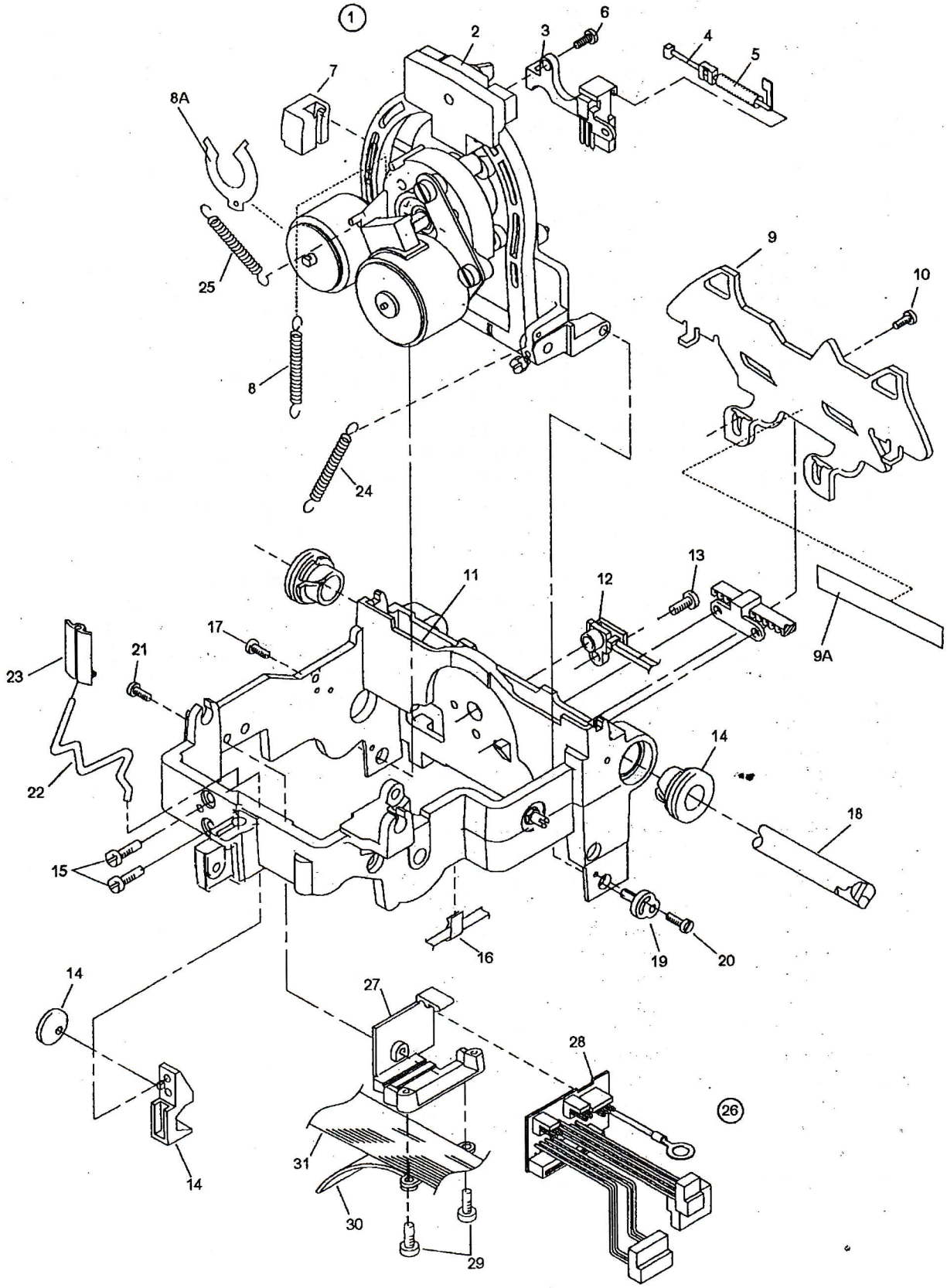

| Asm– Index | Part Number | Units | Description |
|---|---|---|---|
| 14–1 | | 1 | Carrier Asm |
| –2 | 1384816 | 1 | Selection Plate Asm |
| –3 | 1337009 | 1 | • Sensor,Homing<br>Part of Parts Packet 1384498 |
| –4 | 1337801 | 1 | • • Flag,Homing Sensor |
| –5 | | 1 | • • Spring,Homing Sensor Flag<br>Part of Parts Packet 1384861 |
| –6 | | 2 | • Screw,Homing Sensor |
| –7 | 1317943 | 1 | • Pad,Hammer Damper |
| –8 | | 1 | • Spring,Selection Motor Bias |
| –8A | 1342475 | | • Shim-Hammer Impact (Units are As Required) |
| –9 | 1337907 | 1 | • Cardholder |
| –9A | 1339778 | 1 | • • Muffler |
| –10 | | 2 | • Screw,Cardholder<br>Part of Parts Packet 1384498 |
| –11 | 1384830 | 1 | • Frame,Carrier |
| –12 | 1430437 | 1 | • • LED Asm,Pitch/Homing |
| –13 | | 1 | • • Screw,Homing LED<br>Part of Parts Packet 1384498 |
| –14 | 1384085 | 1 | • • Bearing,Carrier B/M |
| –15 | | 2 | • • Screw,Front Carrier Bearing<br>Part of Parts Packet 1384498 |
| –16 | 1342081 | 3 | • • Clip,Homing LED Cable |
| –17 | | 1 | • Screw,Selection Plate Stop<br>Part of Parts Packet 1384498 |
| –18 | 1337071 | 1 | • Shaft,Carrier |
| –19 | 1384067 | 1 | • Eccentric B/M |
| –20 | | 2 | • • Screw,Eccentric Mtg<br>Part of Parts Packet 1384498 |
| –21 | | 1 | • Screw,Carrier Cable Board Bracket<br>Part of Parts Packet 1384498 |
| –22 | 1181016 | 1 | • Post,Indicator |
| –23 | 1342344 | 1 | • Indicator |
| –24 | | 1 | • Spring,Selection Plate Bias<br>Part of Parts Packet 1384497 |
| –25 | | 1 | • Spring,Selection Plate Bias<br>Part of Parts Packet 1384497 |
| –26 | 1383067 | 1 | • Carrier Cable/Board Asm, WW3, WW6 |
| –26 | 1384811 | 1 | • Carrier Cable/Board Asm, Two Board Machines, WW10, WW30, WW50, WW70 |
| –26 | 1383486 | 1 | • Carrier Cable/Board Asm, Single Board Machines, WW10, WW15, WW35, WW50, WW70, WW1500, WW3000, WW3500, WW5000, WW7000 |
| –27 | 1430427 | 1 | • • Bracket, Carrier Cable Board |
| –28 | 1384812 | 1 | • • Board Asm,Carrier Cable |
| –29 | | 2 | • • Screw,Carrier Cable Mtg<br>Part of Parts Packet 1384498 |
| –30 | 1342143 | 1 | • • Retainer, Carrier Cable |
| –31 | 1383393 | 1 | • • Cable,Carrier, WW3, WW6 |
| –31 | 1384813 | 1 | • • Cable, Carrier, Two Board Machines, WW10, WW30, WW50, WW70 |
| –31 | 1383485 | 1 | • • Cable, Carrier, Single Board Machines, WW10, WW15, WW35, WW50, WW70, WW1500, WW3000, WW3500, WW5000, WW7000 |

## Assembly 15: Ribbon Assembly

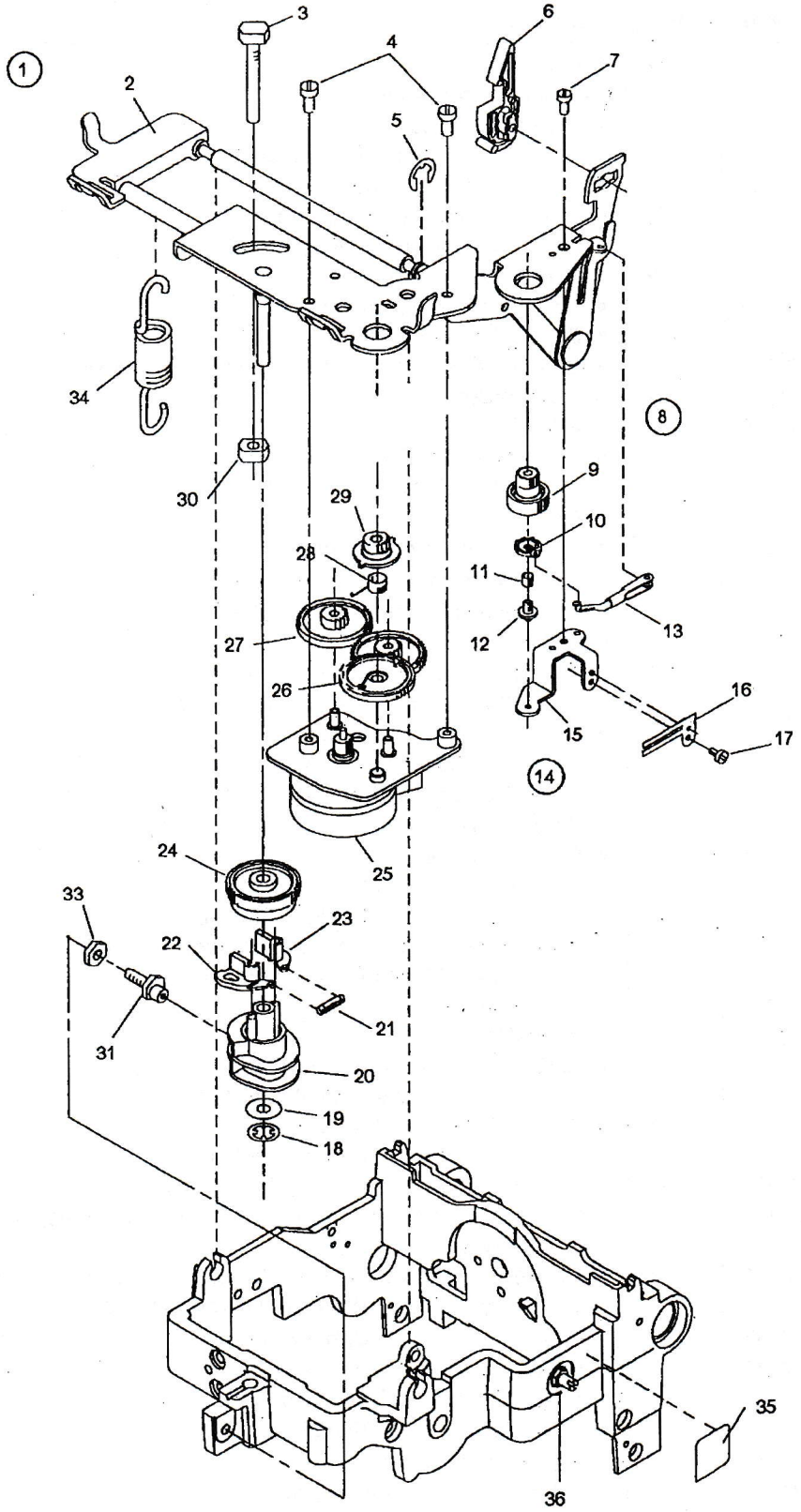

| Asm— Index | Part Number | Units | Description |
|---|---|---|---|
| 15—1 | 1400409 | 1 | Plate Asm,Ribbon, Thailand, Saudi Arabia |
| | | | Includes Items 2, 3, 4, 5, and 6A |
| —1 | 1384817 | 1 | Plate Asm,Ribbon |
| —2 | 1384819 | 1 | • Plate,Ribbon |
| —3 | 1430397 | 1 | • Stud, Knock-Off |
| —4 | | 2 | • Screw,Ribbon Motor Mtg |
| | | | Part of Parts Packet 1384861 |
| —5 | | 1 | • Retainer,Ribbon Plate Pivot |
| | | | Part of Parts Packet 1384499 |
| —6 | 1339347 | 1 | • Latch,Ribbon Cartridge |
| —6A | 1433728 | 1 | • Latch, Ribbon Cartridge, Thailand, Saudia Arabia |
| —7 | | 1 | • Screw,Correction Bracket Mtg |
| —8 | 1384818 | 1 | • Ratchet Asm,Tape Feed |
| —9 | | 1 | • • Gear,Tape Feed |
| —10 | | 1 | • • Ratchet,Tape Feed |
| —11 | | 1 | • • Spring,Tape feed |
| —12 | | 1 | • • Stud,Feed Ratchet |
| —13 | 1339011 | 1 | • Link Asm,Correction Feed |
| —14 | 1384820 | 1 | • Bracket Asm,Correction Feed |
| —15 | 1339292 | 1 | • • Bracket,Correction Feed |
| —16 | 1339291 | 1 | • • Spring,Correction Feed |
| —17 | | 1 | • • Screw,Correction Feed |
| | | | Part of Parts Packet 1384861 |
| —18 | 1171121 | 1 | • Retainer,Lift Cam |
| | | | Part of Parts Packet 1384861 |
| —19 | 1622274 | 1 | • Washer |
| —20 | 1430406 | 1 | • Cam Asm, Ribbon Lift |
| —21 | 1073449 | 1 | • Spring,Lift Pawl |
| | | | Part of Parts Packet 1384861 |
| —22 | 1430410 | 1 | • Pawl, Ribbon Lift |
| —23 | 1430411 | 1 | • Pawl, Correction Lift |
| —24 | 1430409 | 1 | • Gear, Lift Cam |
| —25 | 1384821 | 1 | • Plate Asm, Ribbon Motor |
| —26 | 1430414 | 1 | • Gear, Ribbon Feed |
| —27 | 1342106 | 2 | • Gear,Ribbon Drive Idler |
| —28 | 1430412 | 1 | • Spring, Pawl |
| —29 | 1430413 | 1 | • Follower, Ribbon Feed |
| —30 | 1622434 | 1 | • Nut |
| —31 | 1430460 | 1 | • Follower, Ribbon Lift Cam |
| —33 | | 1 | • Nut,Cam Follower |
| | | | Part of Parts Packet 1384499 |
| —34 | 1430451 | 1 | Spring, Ribbon Plate Bias |
| —35 | 1430455 | 1 | Damper |
| —36 | 1339275 | 1 | Stud,Correction Feed |

## Assembly 16: Transport Assembly

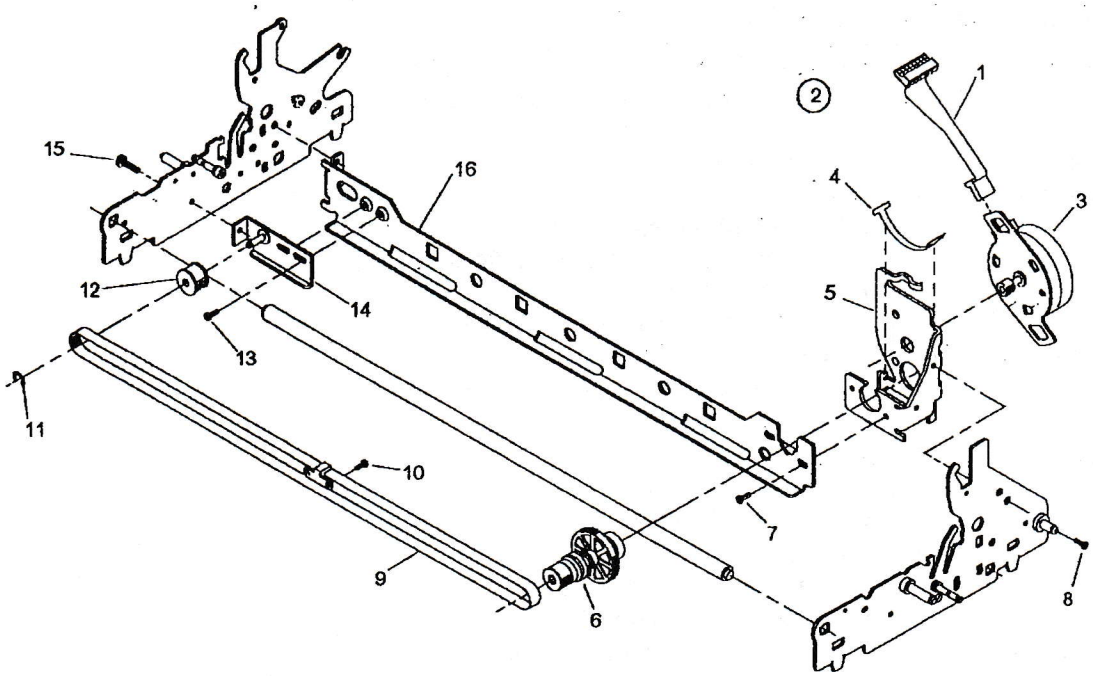


| Asm–Index | Part Number | Units | Description |
|---|---|---|---|
| 16–1 | 1341679 | 1 | Cable,Transport Motor, WW3/6 |
| –1 | 1431372 | 1 | Cable,Transport Motor, WW10 and WW15, With DCA Function Board |
| –1 | 1430112 | 1 | Cable,Transport Motor, WW10 and WW15, Without DCA Function Board, WW30, WW35, WW50, WW70, WW1500, WW3000, WW3500 |
| –1 | 1417460 | 1 | Cable,Transport Motor, WW5000 and WW7000 |
| –2 | 1384822 | 1 | Transport Asm |
| –3 | 1384823 | 1 | • Transport Motor Asm |
| –4 | 1430495 | 1 | • Spring, Transport Gear Load |
| –5 | 1430481 | 1 | • Bracket, Transport Motor |
| –6 | 1384824 | 1 | • Gear Asm,Transport |
| –7 | | 2 | • Screw,Transport Motor Mtg<br>Part of Parts Packet 1384498 |
| –8 | | 4 | • Screw,Transport Bracket Mtg<br>Part of Parts Packet 1384498 |
| –9 | 1337651 | 1 | • Transport Belt |
| –10 | | 2 | • Screw,Transport Belt Mtg, Part of Parts Packet 1384498 |
| –11 | | 1 | • Retainer,Idler Pulley, Part of Parts Packet 1384499 |
| –12 | 1339146 | 1 | • Transport Pulley |
| –13 | | 2 | • Screw,Idler Pulley Plate Mtg<br>Part of Parts Packet 1384498 |
| –14 | 1339152 | 1 | • Idler Plate Asm |
| –15 | | 1 | • Screw,Idler Pulley Plate Adj<br>Part of Parts Packet 1384498 |
| –16 | 1431484 | 1 | Transport Bracket |
| –17 | 2102365 | 2 | Clamp,Transport motor Cable, Shaft |
| –17 | 1431771 | 2 | Clamp,Transport motor Cable, Bracket |

## Assembly 17: CRT Display Assembly, WW50, WW70, WW5000, WW7000

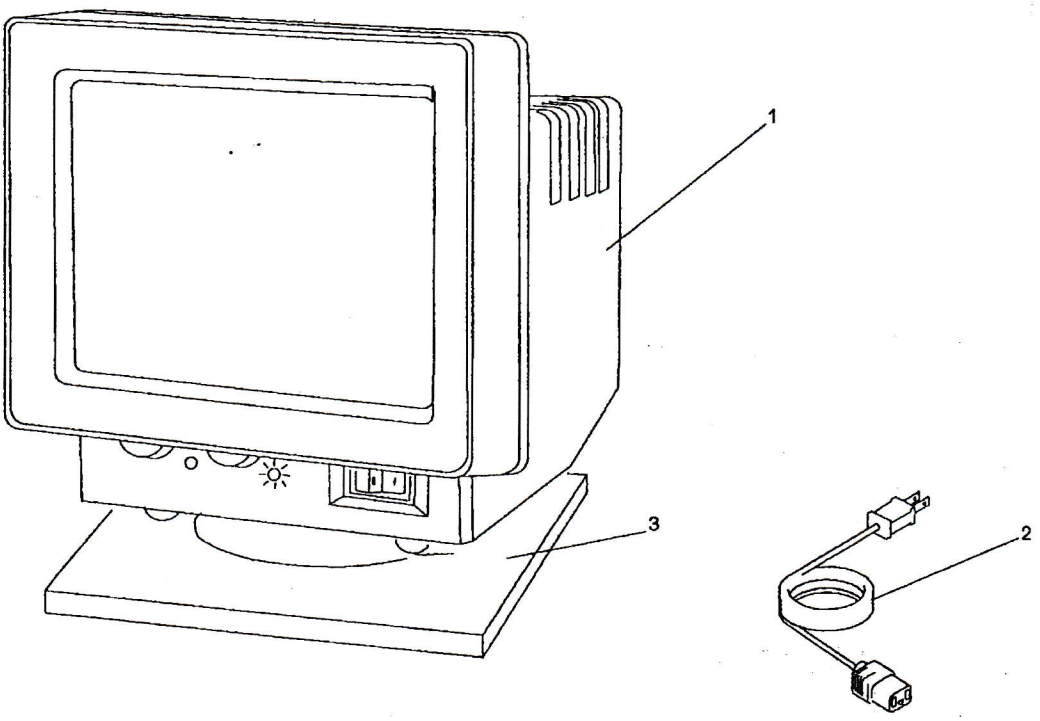


| Asm–Index | Part Number | Units | Description |
|---|---|---|---|
| 17–1 | 85X7419 | 1 | Monitor,9″ 90-137 V, U.S. |
| –1 | 85X7420 | 1 | Monitor,9″ 180-265 V, Non U.S. |
| –2 | 1339517 | 1 | Line Cord, U.S. |
| –2 | 1339518 | 1 | Line Cord, Australia/New Zealand |
| –2 | 1339519 | 1 | Line Cord, United Kingdom |
| –2 | 1339520 | 1 | Line Cord, Europe |
| –2 | 1339521 | 1 | Line Cord, Israel |
| –2 | 1339522 | 1 | Line Cord, Switzerland |
| –2 | 1339523 | 1 | Line Cord, South Africa |
| –2 | 1339524 | 1 | Line Cord, Italy |
| –2 | 1339525 | 1 | Line Cord, Denmark |
| –3 | 1434241 | 1 | Base, Display(Includes sw iveland mounting clip) |

## Assembly 18: CRT Display Mounting Arm Option Assembly, WW50, WW70, WW5000, WW7000

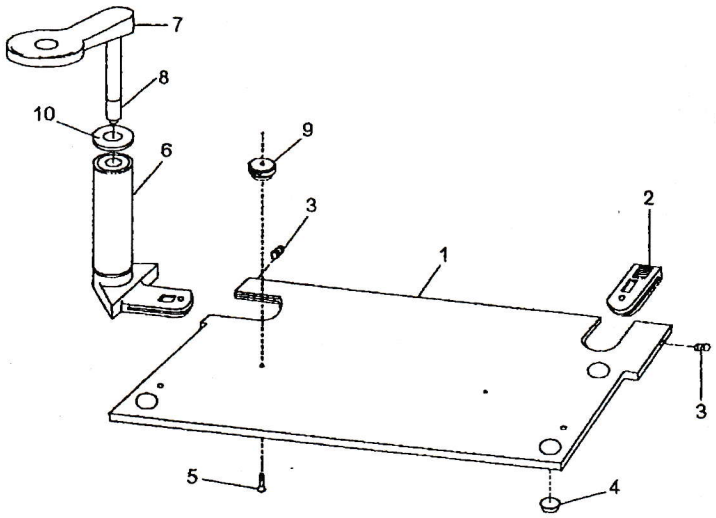


| Asm–Index | Part Number | Units | Description |
|---|---|---|---|
| 18–1 | 1431761 | 1 | Baseplate |
| –2 | 1431763 | 1 | Plug Asm, Hole |
| –3 | | 2 | Setscrew,Foot |
| | | | Part of Parts Packet 1384889 |
| –4 | | 6 | Foot,Base |
| | | | Part of Parts Packet 1384889 |
| –5 | | 1 | Screw,Anchor |
| | | | Part of Parts Packet 1384889 |
| –6 | 1431751 | 1 | Post Asm |
| –7 | 1431758 | 1 | Arm Asm |
| –8 | 1431767 | 1 | Extension,Shaft |
| –9 | 1431765 | 1 | Thumbwheel |
| | | | Part of Parts Packet 1384889 |
| –10 | 1431770 | | Washer |

## Assembly 19: Diskette Drive Option WW30, WW35, WW50, WW70, WW3500, WW5000, WW7000

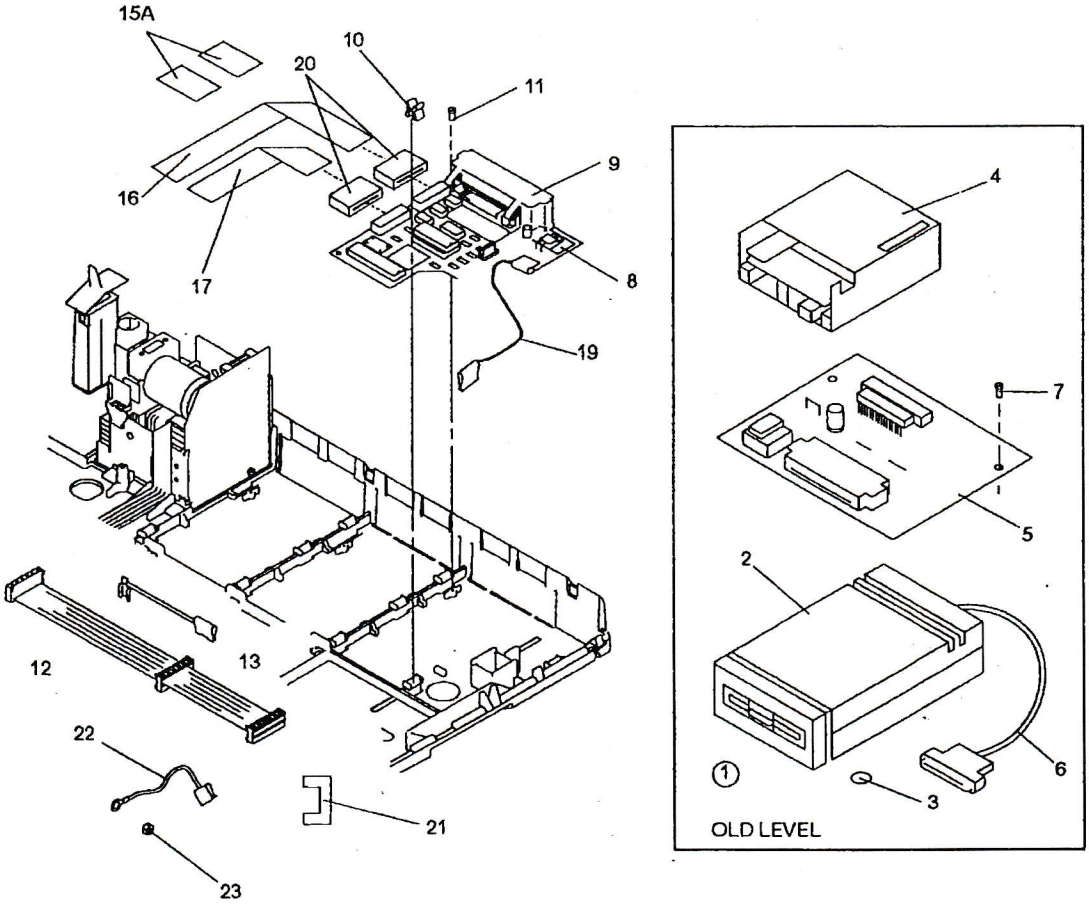

| Asm–Index | Part Number | Units | Description |
|---|---|---|---|
| 19–1 | 2683200 | 1 | Diskette Drive Assembly, 3.5", old level (2 1/8" thick) |
| –2 | 2683193 | 1 | • Covers |
| –3 | 1432120 | 4 | • Foot,Diskette Drive |
| –4 | 6820821 | 1 | • Disk Drive, 3.5" (bare Drive) |
| –5 | 2683195 | 1 | • Interface Card |
| –6 | 2683197 | 1 | • Cable Group<br>Only one cable is used for this machine, discard the other cable. |
| –7 | 2683194 | 1 | • Hardware Group, Plate, Screws, Washer<br>Not all parts in this group are required for this machine. |
| –8 | 1383411 | 1 | Board Asm, Diskette Control |
| –8 | 1400358 | 1 | Board Asm, Diskette Control, Brazil |
| –9 | 1432105 | 1 | • Cover, Diskette Board |
| –10 | 1432198 | 3 | Clip,Mtg |
| –11 | 1622660 | 1 | Screw,Diskette Board Mtg |
| –12 | 1432108 | 1 | Cable,Diskette Board to Power Supply |
| –13 | 1431354 | 4 | Ground Cable |
| –14 | 1430379 | 2 | Ground Cable |
| –15 | 1432125 | 1 | Cable Kit, Diskette Control Board |
| –15A | 1430110 | 2 | • Cable, Diskette Control Board-to-Printer Option Board |
| –16 | 1432106 | 1 | • Cable,Diskette Control Board-to-Function Board, Long |
| –17 | 1432107 | 1 | • Cable,Diskette Control Board-to-Function Board, Short |
| –18 | 1432482 | 1 | Keyboard Label—Spell Check II, Printer, Diskette-Symbols |
| –18 | 1434513 | 1 | Keyboard Label—Spell Check II, Diskette-Abbreviations |
| –18 | 1434515 | 1 | Keyboard Label—Spell Check I, Diskette-Symbols |
| –18 | 1434517 | 1 | Keyboard Label—Spell Check II, Diskette-Symbols |
| –19 | 1432123 | 1 | Ground Strap—Diskette Board to Frame |
| –20 | 1425047 | 2 | Toroid—Cable |
| –21 | 1431771 | 2 | Clamp, Return and Escapement Cable, WW30, WW35, WW50, WW70, WW3500 Non-U.S. |
| –22 | 1319133 | 2 | Ground Strap— Index Motor to Power Supply |
| –23 | 1622401 | 2 | Nut, ground |

**Assembly 19: (continued)**

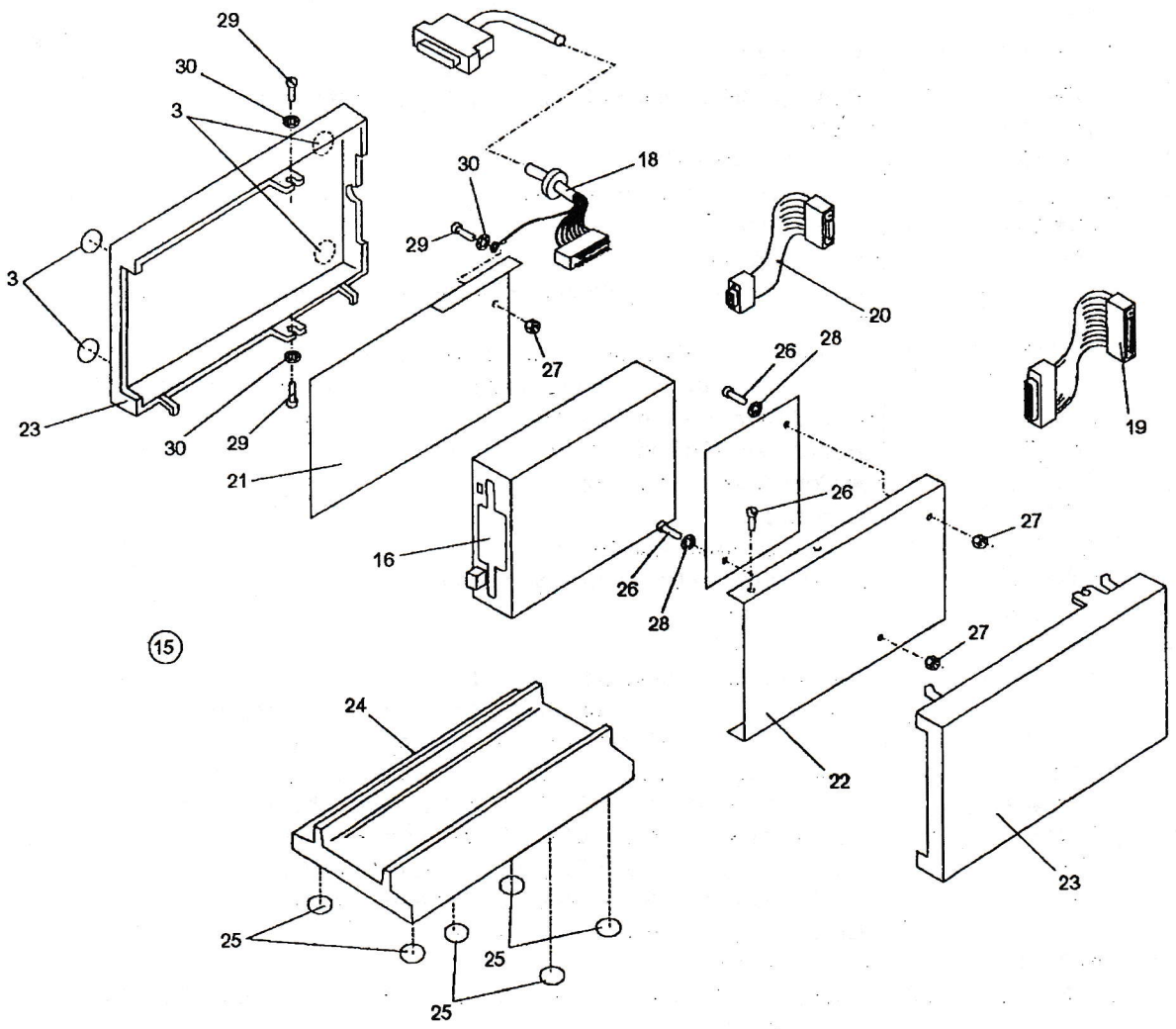

| Asm–Index | Part Number | Units | Description |
|---|---|---|---|
| 19–15 | 1333121 | 1 | Diskette Drive Assembly, Slim line 3.5", new level (1 1/2" thick) |
| –16 | 1400387 | 1 | • Diskette Drive w/o covers and cables |
| –17 | 1400388 | 1 | • Board, Interface |
| –18 | 1333103 | 1 | • Cable, 37 pin, diskette drive |
| –19 | 1333104 | 1 | • Cable, 34 pin, interface |
| –20 | 1333105 | 1 | • Cable, 4 pin, power |
| –21 | 1333110 | 1 | • Shield, LH |
| –22 | 1333111 | 1 | • Shield, RH |
| –23 | 1333113 | 1 | • Cover |
| –24 | 1333119 | 1 | • Stand |
| –25 | 1333117 | 6 | • Pad, stand and cover |
| –26 | 1621187 | 9 | • screw |
| –27 | 1622401 | 1 | • Nut |
| –28 | 1622344 | 3 | • Lock Washer |
| –29 | 1621171 | 2 | • screw |
| –30 | 1622302 | 2 | • Washer |

## Assembly 20: Memory Expansion, WW30

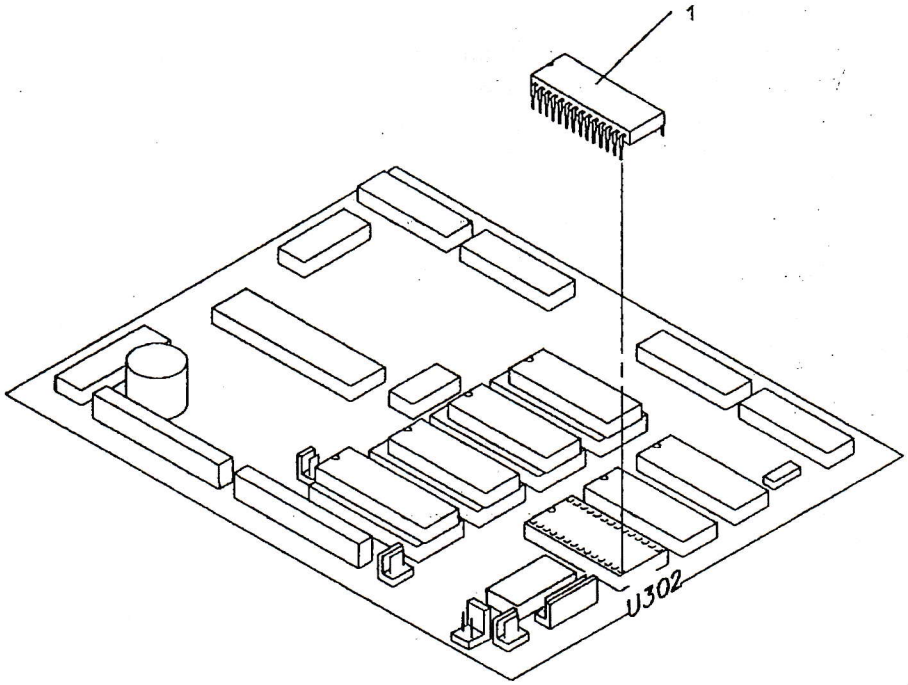


| Asm–Index | Part Number | Units | Description |
|---|---|---|---|
| 20–1 | 1430807 | 1 | 32K Memory Expansion Module |

## Assembly 21: Pinwheel Form Feeder Assembly

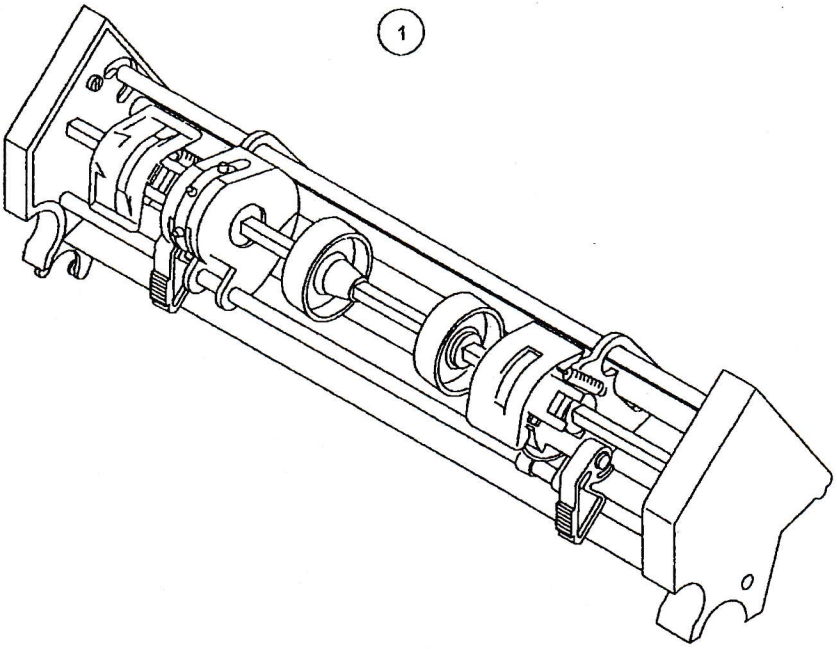


| Asm–Index | Part Number | Units | Description |
|---|---|---|---|
| 21–1 | 1319226 | 1 | Pinwheel Form Feeder Assembly |

## Assembly 22: Sheetfeed/Form Feed Adapter Kit, WW10, WW15, WW30, WW35, WW50, WW70, WW1500, WW3000, WW3500, WW5000, WW7000

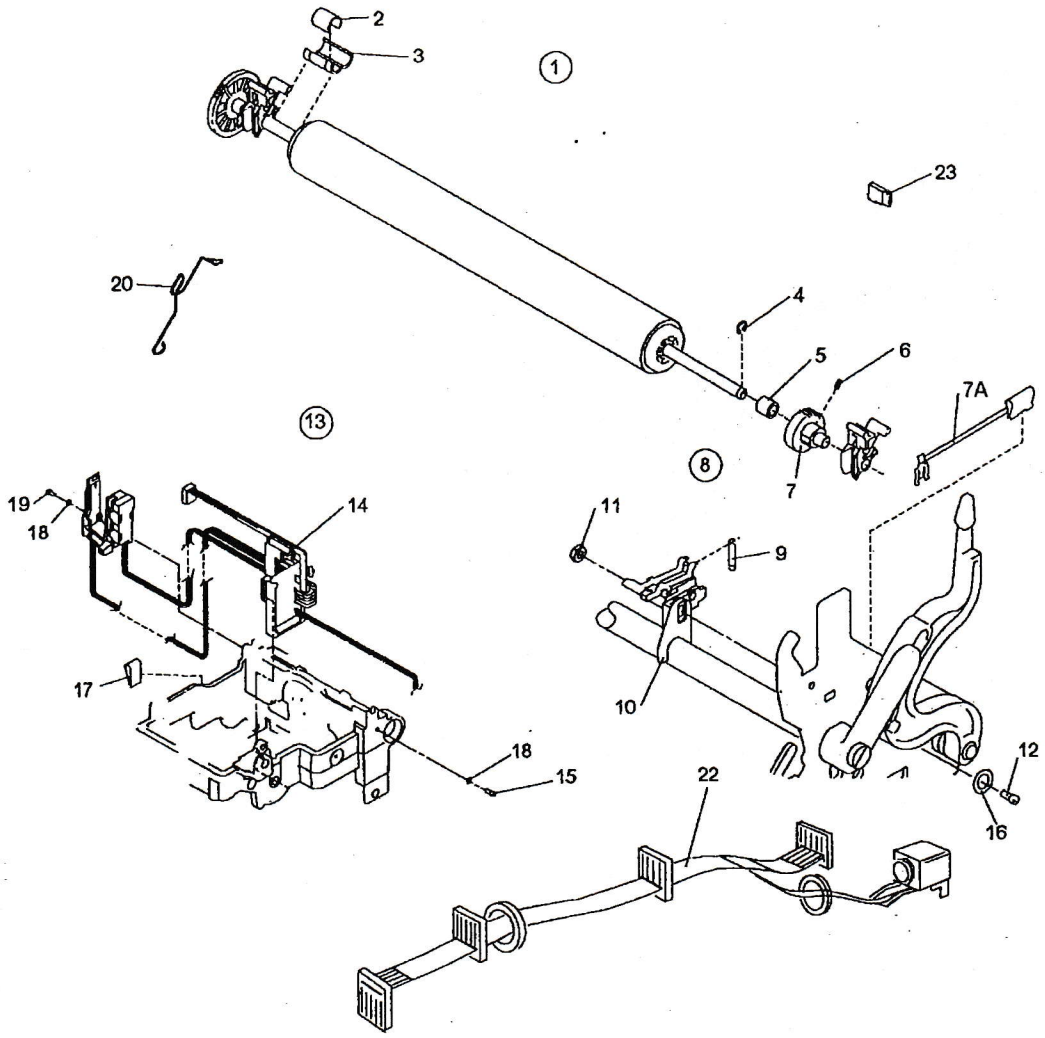

| Asm– Index | Part Number | Units | Description |
|---|---|---|---|
| 22–1 | | 1 | Adapter Kit, Sheetfeed/Pinwheel |
| –2 | 1433812 | 1 | • Clip,Spring |
| –3 | 1430496 | 1 | • Bushing, Platen LH |
| –4 | 1126832 | 1 | • Retainer,Platen Latch |
| –5 | 1341122 | 1 | • Bushing,Platen RH |
| –6 | 1621718 | 2 | • Screw,Platen Gear Mtg |
| –7 | 1430488 | 1 | • Gear, Platen |
| –7A | 1431354 | 1 | • Ground Strap |
| –8 | 1383118 | 1 | • Switch Asm,Sensor |
| –9 | 1171923 | 2 | • • Spring,Actuator |
| –10 | 1432357 | 1 | • • Bracket, Sensor, Switch Asm Mtg |
| –11 | 1622391 | 1 | • Nut,Sensor Switch Asm, Bracket Mtg |
| –12 | 1621171 | 1 | • Screw,Switch Asm Mtg |
| –13 | 1383119 | 1 | • Sensor Asm,Ribbon and Paper |
| –14 | 1432363 | 1 | • • Housing, Sensor Asm |
| –15 | 1621170 | 1 | • Screw,Paper Sensor Mtg |
| –16 | 1622302 | 1 | • Washer, Sensor Switch Asm Mtg |
| –17 | 1342081 | 1 | • Clip,Ribbon Sensor Asm |
| –18 | 1135663 | 2 | • Washer,Ribbon and Paper Sensor Mtg |
| –19 | 1621170 | 1 | • Screw,Ribbon Sensor Mtg |
| –20 | 1432355 | 1 | • Clip,Platen Ground |
| –21 | 1433813 | 1 | • Fuse,High Voltage Power Supply, Non U.S. This fuse is required for non-universal power supplies when installing sheetfeed option. |
| –22 | 1433810 | 1 | • Cable,Sheetfeed Power |
| –23 | 1430462 | 1 | • Tool, Sensor Adjusting |

## Assembly 23: Sheetfeed Assembly

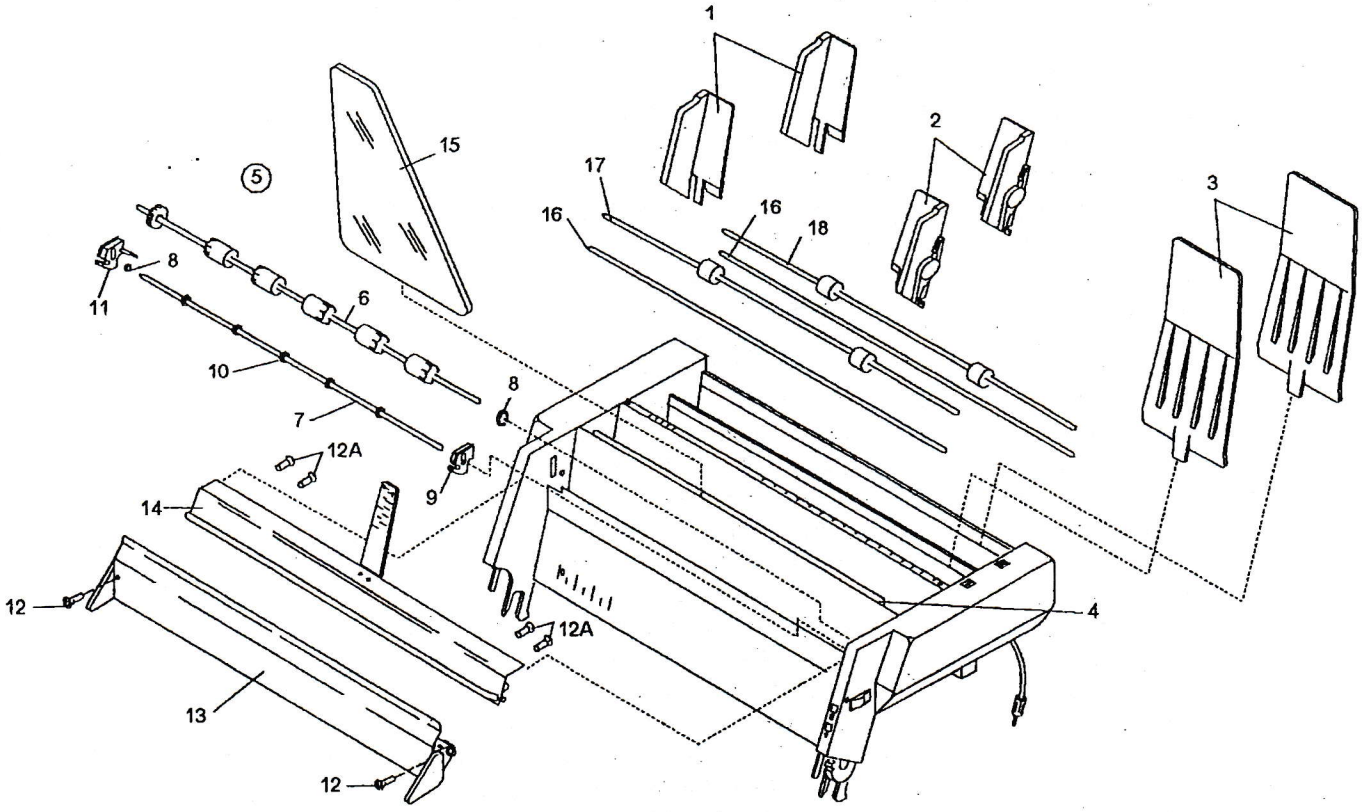

| Asm— Index | Part Number | Units | Description |
|---|---|---|---|
| 23—1 | 1383130 | 2 | Paper Guide Asm, LH |
| —2 | 1383131 | 2 | Paper Guide Asm, RH |
| —3 | 1383138 | 2 | Paper Support, Middle |
| —4 | 1383146 | 1 | Paper Output Tray Asm |
| —5 | 1383147 | 1 | Exit Shaft |
| —6 | | 1 | • Shaft Asm, Exit drive |
| —7 | | 1 | • Shaft Asm, Exit Idler |
| —8 | | 1 | Retainer, Part of Parts Packet 1383123. |
| —9 | | 1 | Bearing, Exit Idler Shaft, RH<br>Part of Parts Packet 1383126. |
| —10 | | 5 | O-Ring, Exit Idler Shaft<br>Part of Parts Packet 1383123. |
| —11 | | 1 | Bearing, Exit Idler Shaft, LH<br>Part Of Parts Packet 1383126. |
| —12 | | 2 | Screw, Collator Tray<br>Part of Parts Packet 1383122. |
| —13 | 1383139 | 1 | Collator Tray Asm |
| —14 | 1383142 | 1 | Exit Shaft Cover Asm |
| —15 | 1383141 | 1 | Output Paper Support |
| —16 | 1383143 | 2 | Paper Pressure Bar Asm |
| —17 | 1383127 | 1 | Front Bin Shaft/Roller |
| —18 | 1383128 | 1 | Rear Bin Shaft/Roller |

**Assembly 23: (continued)**

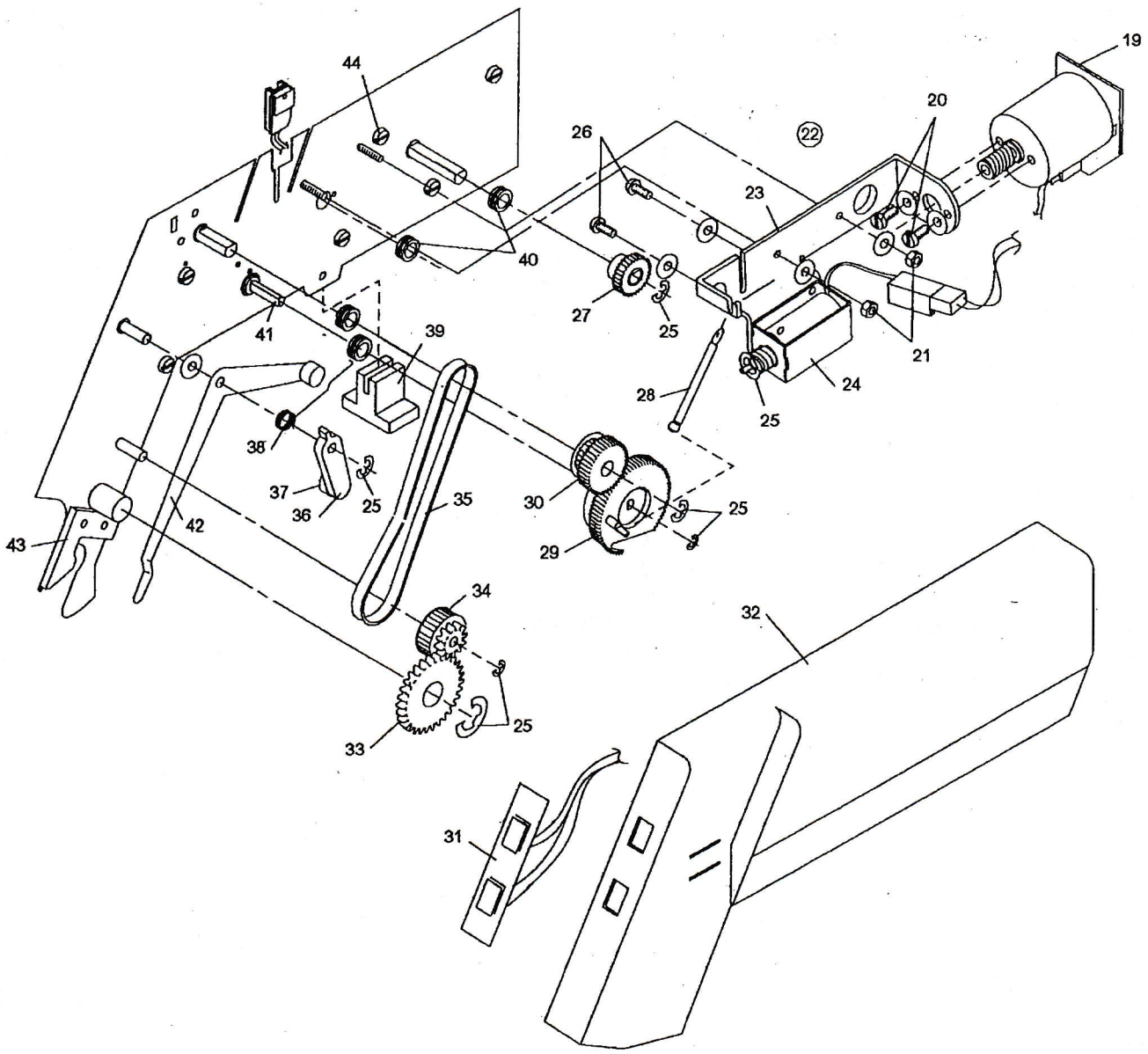

| Asm— Index | Part Number | Units | Description |
|---|---|---|---|
| 23—19 | 1383140 | 1 | Drive Motor Asm |
| —20 | | 2 | Screw, Motor Mounting<br>Part of Parts Packet 1383122. |
| —21 | | 2 | Nut, Solenoid/Motor Bracket Mtg<br>Part of Parts Packet 1383122. |
| —22 | 1383148 | 1 | Solenoid/Bracket |
| —23 | | 1 | • Bracket, Solenoid/Motor Mounting |
| —24 | | 1 | • Solenoid, Bail Lift Actuator |
| —25 | | 1 | Retainer<br>Part of Parts Packet 1383123. |
| —26 | | 2 | Screw, Solenoid Mounting<br>Part of Parts Packet 1383122. |
| —27 | | 1 | Worm Gear, Rear Feed Roller Shaft<br>Part of Parts Packet 1383125. |
| —28 | | 1 | Spring,RH Bail Gear/Cam Bias<br>Part of Parts Packet 1383124. |
| —29 | | 1 | Gear/Cam Asm, RH Bail Lift Sector<br>Part of Parts Packet 1383125. |
| —30 | | 1 | Gear/Pulley, Upper Belt<br>Part of Parts Packet 1383129. |
| —31 | 1383135 | 1 | Manual Switch Board |
| —32 | 1383137 | 1 | Cover, RH |
| —33 | | 1 | Gear, Platen Drive<br>Part of Parts Packet 1383125. |
| —34 | | 1 | Gear/Pulley, Lower Belt<br>Part of Parts Packet 1383129. |
| —35 | | 1 | Belt, Drive<br>Part of Parts Packet 1383129. |
| —36 | | 1 | Arm, Belt Tension<br>Part of Parts Packet 1383129. |
| —37 | | 1 | Roller, Belt Tension Arm<br>Part of Parts Packet 1383129. |
| —38 | | 1 | Spring, Belt Tension Arm<br>Part of Parts Packet 1383124. |
| —39 | | 2 | Foot, Feeder<br>Part of Parts Packet 1383126. |
| —40 | | 4 | Bushing, Exit Drive Shaft<br>Part of Parts Packet 1383126. |
| —41 | 1383145 | 1 | Shaft, Bail Lift Cam |
| —42 | 1383149 | 1 | Paper Bail Opener Lever Asm |
| —43 | 1383150 | 1 | Platen Latch Asm |
| —44 | | 6 | Screw, Extrusion Mounting<br>Part of Parts Packet 1383122. |

**Assembly 23: (continued)**

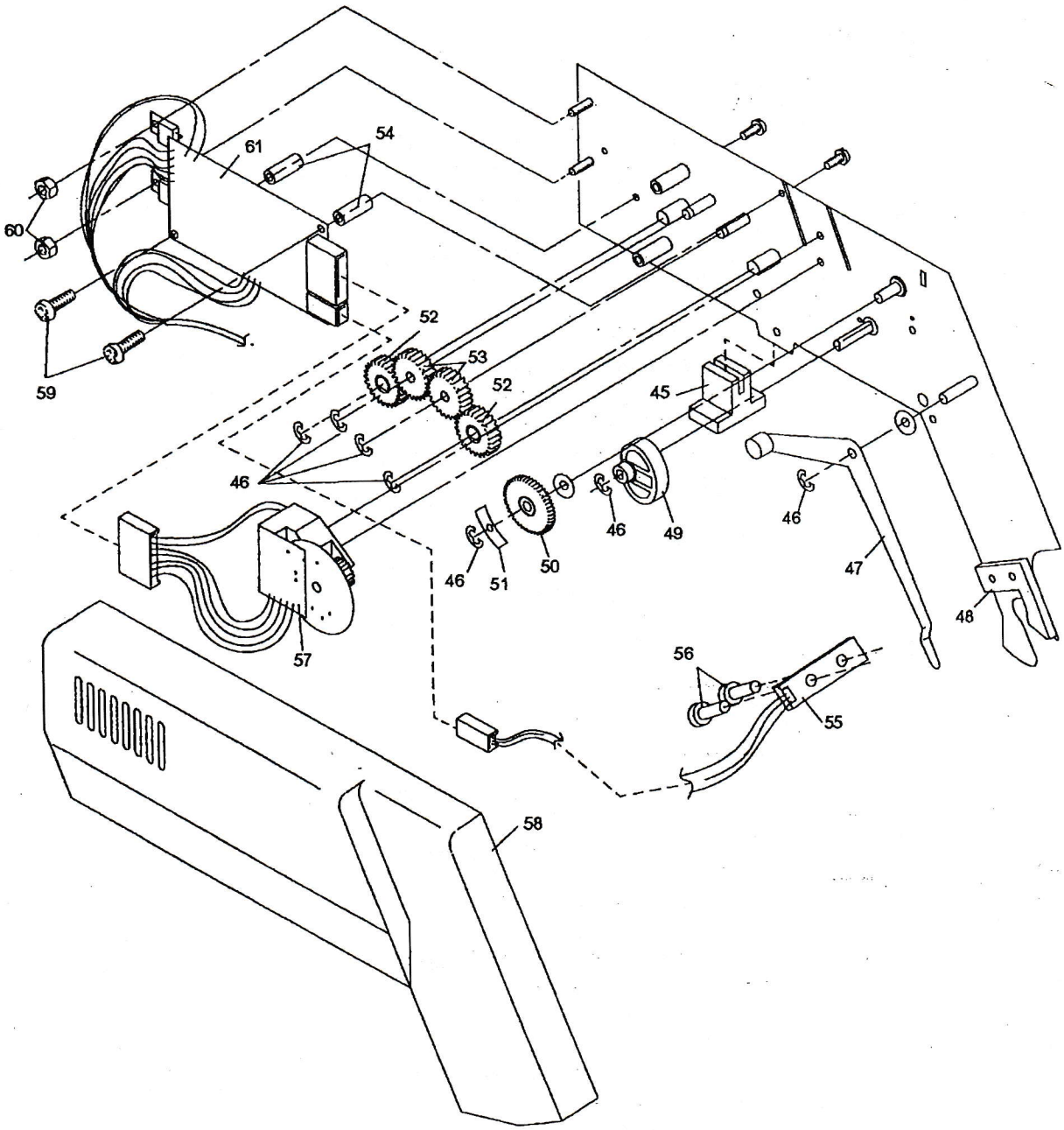

| Asm– Index | Part Number | Units | Description |
|---|---|---|---|
| 23–45 | | 1 | Foot, Feed<br>Part of Parts Packet 1383126. |
| –46 | | 1 | Retainer<br>Part of Parts Packet 1383123. |
| –47 | 1383149 | 1 | Paper Bail Opener Lever Asm |
| –48 | 1383150 | 1 | Platen Latch Asm |
| –49 | | 1 | Cam, LH Bail lift<br>Part of Parts Packet 1383125. |
| –50 | | 1 | Gear, Sensor Wheel Drive<br>Part of Parts Packet 1383125. |
| –51 | | 1 | Spring, Sens Wheel Drive Gear Bias<br>Part of Parts Packet 1383124. |
| –52 | | 2 | Gear, Feed Roller Shaft<br>Part of Parts Packet 1383125. |
| –53 | | 2 | Gear, Feed Roller Shaft Idler<br>Part of Parts Packet 1383125. |
| –54 | | 2 | Spacer, Logic Board Mounting<br>Part of Parts Packet 1383122. |
| –55 | 1383134 | 1 | Feed Stop Sensor Board |
| –56 | | 2 | Screw, Feed Stop Sensor Mounting |
| –57 | 1383132 | 1 | Sensor Asm, Bin Selection<br>Part of Parts Packet 1383122. |
| –58 | 1383136 | 1 | Cover, LH |
| –59 | | 2 | Screw, Logic Board Mounting<br>Part of Parts Packet 1383122. |
| –60 | | 2 | Nut, Regulator Mounting<br>Part of Parts Packet 1383122. |
| –61 | 1383133 | 1 | Logic Board |

## Assembly 24: Printer Option, WW10, WW15, WW30, WW35, WW50, WW70, WW1500, WW3000, WW3500, WW5000, WW7000

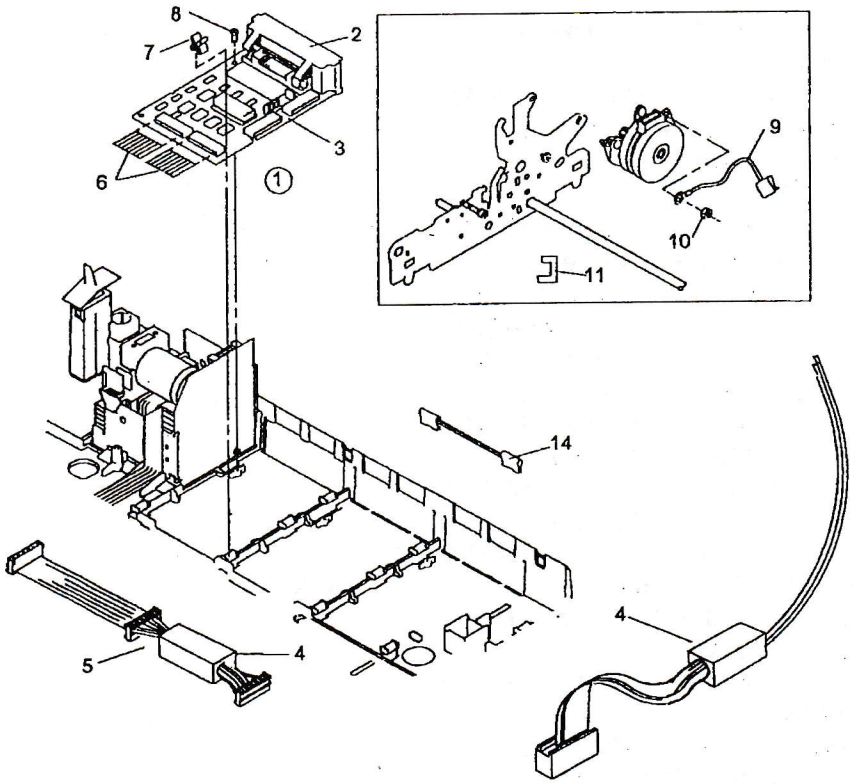

| Asm– Index | Part Number | Units | Description |
|---|---|---|---|
| 24–1 | | 1 | Kit,Printer Option |
| –2 | 1432205 | 1 | • Cover,Board |
| –3 | 1400419 | 1 | • Board Asm, Except Brazil & ROECE |
| –3 | 1400420 | 1 | • Board Asm, Brazil |
| –3 | 1400421 | 1 | • Board Asm, ROECE |
| –4 | 1043533 | 1 | • Toroid, LCD Display Cable, WW30 |
| –4 | 1043533 | 1 | • Toriod, Power Cable, except WW30 |
| –5 | 1432230 | 1 | • Cable, Power |
| –6 | 1430110 | 4 | • Cable, System Connect, Except WW10 and WW15 with DCA Function Board |
| –6 | 1431374 | 2 | • Cable, System Connect, WW10 and WW15 with DCA Function Board |
| –7 | 1432198 | 2 | • Clip,Board |
| –8 | 1622660 | 1 | • Screw,Printer Option Board Mtg |
| –9 | 1319133 | 1 | • Ground Strap, Index Motor (If Not Already Installed) |
| –10 | 1622401 | 1 | • Nut,Ground Strap Mtg (If Not Already Installed) |
| –11 | 1431771 | 2 | • Clamp, Transport Motor Cable<br>If no rear shaft in FPT. |
| –12 | | 1 | • Keyboard Labels<br>Part of Parts Packet 1384923 |
| –12 | 1432450 | 1 | • • Label,Keyboard, Spell Check I, Printer, Abbreviations<br>Part of Parts Packet 1384923 |
| –12 | 1432540 | 1 | • • Label,Keyboard, Short<br>Part of Parts Packet 1384923 |
| –12 | 1432542 | 1 | • • Label,Keyboard, Symbols, Short<br>Part of Parts Packet 1384923 |
| –12 | 1432452 | 1 | • • Label,Keyboard, Symbols, Spell Check I, Printer, Symbols<br>Part of Parts Packet 1384923 |
| –12 | 1432482 | 1 | • • Label, Keyboard, Spell Check II, Printer, Diskette, Symbols |
| –12 | 1432480 | 1 | • • Label, Keyboard, Spell Check II, Printer, Diskette, Abbreviations |
| –13 | 1431840 | 1 | • Printer Cable Toroid Kit, WW70 (required with non-universal power supply only, not shown) |
| –14 | 1431354 | 5 | • Ground Strap, Frame/K.B. to Ground Shield |
| –15 | 1400289 | 1 | • Inlet Coupler, Linecord (not shown) (required with universal power only) |

## Assembly 25: Soundhood Assembly

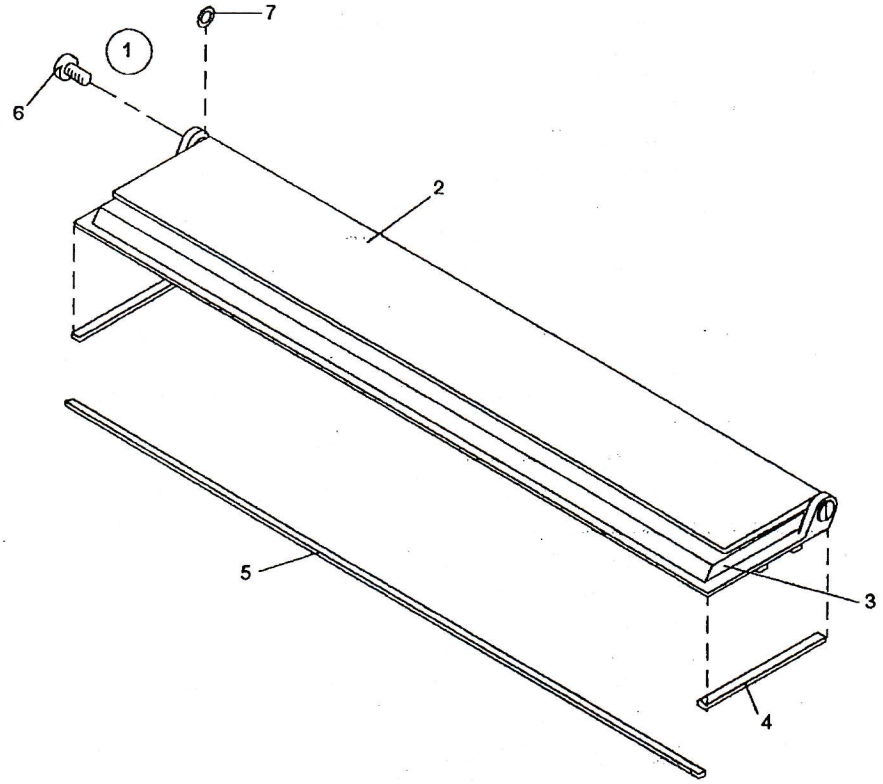


| Asm–Index | Part Number | Units | Description |
|---|---|---|---|
| 25–1 | 1432447 | 1 | Soundhood Asm |
| –2 | | 1 | • Visor |
| –3 | | 1 | • Soundhood |
| –4 | 1432577 | 2 | • Seal,Side |
| –5 | 1432576 | 1 | • Seal,Front |
| –6 | 1358452 | 2 | • Screw,Visor Mtg |
| –7 | 1205606 | 1 | • Washer,Visor |

## Assembly 26: Spell Check I Option, WW10, WW15, WW1500, WW3000

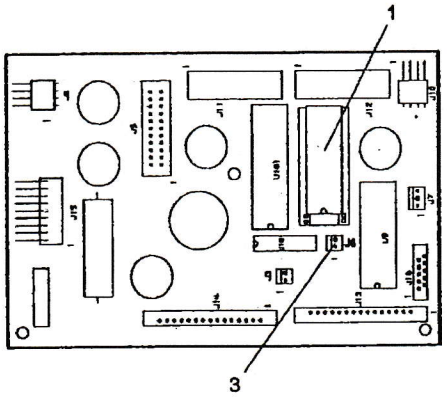


DCA

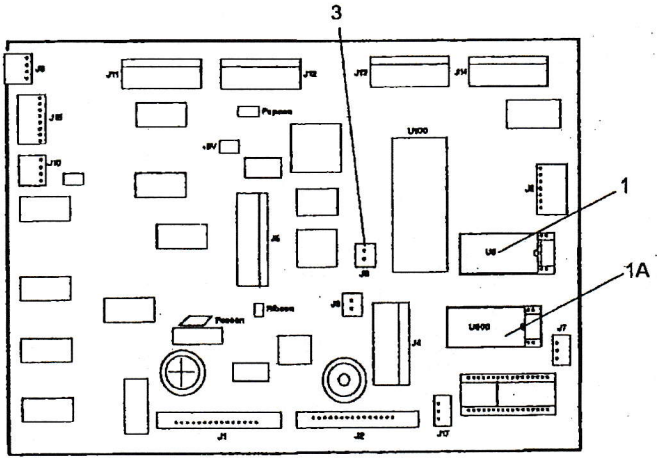


SMT

| Asm–Index | Part Number | Units | Description |
|---|---|---|---|
| 26–1 | 1432270 | 1 | Kit, Spell Check I, U.S./English, WW10 |
| –1 | 1432280 | 1 | Kit, Spell Check I, U.K./English, WW10, WW15 |
| –1 | 1432290 | 1 | Kit, Spell Check I, Spanish, WW10, WW15 |
| –1 | 1432310 | 1 | Kit, Spell Check I, French, WW10, WW15 |
| –1 | 1432300 | 1 | Kit, Spell Check I, German, WW10, WW15 |
| –1A | 1400394 | 1 | Kit, Spell Check I, U.K./English, WW1500, WW3000 |
| –1A | 1400393 | 1 | Kit, Spell Check I, Spanish, 1500, WW3000 |
| –1A | 1400391 | 1 | Kit, Spell Check I, French, WW1500 , WW3000 |
| –1A | 1400392 | 1 | Kit, Spell Check I, German, WW1500 , WW3000 |
| –2 | 1430450 | 1 | Label, Keyboard, Long<br>Part of Parts Packet 1384923 |
| –2 | 1432452 | 1 | Label, Keyboard, Symbols, Long<br>Part of Parts Packet 1384923 |
| –3 | 85X7326 | 1 | Jumper, Spanish, French, German, WW10, WW15 |

## Assembly 27: Spell Check Option I and II, WW30, WW35, WW50, WW3500, WW5000

Function Board, WW30, WW50
(Two Board Version)

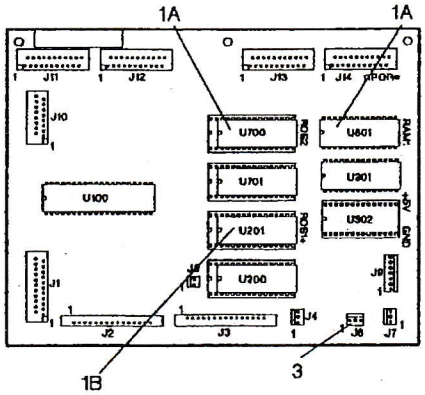


Function Board, WW35, WW3500, WW50, WW5000
(Single Board Version)

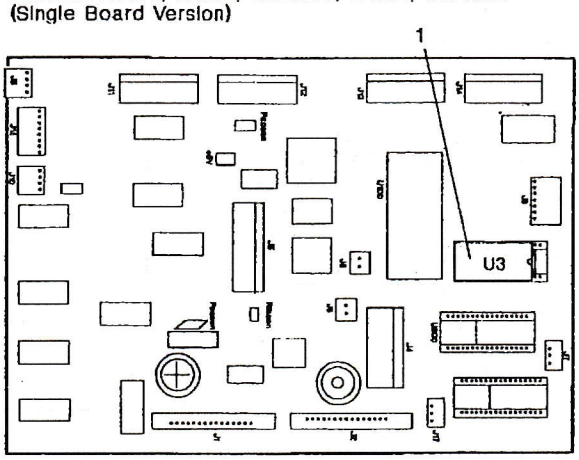


| Asm–Index | Part Number | Units | Description |
|---|---|---|---|
| 27–1 | 1400373 | 1 | Kit,Spell Check I, French, Single Board Machines, WW35, WW50, WW3500, WW5000 |
| –1B | 1432310 | 1 | Kit,Spell Check I, French, Two Board Machines, WW30, WW50, |
| –1 | 1400372 | 1 | Kit,Spell Check I, German, Single Board Machines, WW35, WW50, WW3500, WW5000 |
| –1B | 1432300 | 1 | Kit,Spell Check I, German, Two Board Machines, WW30, WW50, |
| –1 | 1400374 | 1 | Kit,Spell Check I, Spanish, Single Board Machines, WW35, WW50, WW3500, WW5000 |
| –1B | 1432290 | 1 | Kit,Spell Check I, Spanish, Two Board Machines, WW30, WW50 |
| –1B | 1432290 | 1 | Kit,Spell Check II, Non-Spain Spanish, WW3500 |
| –1 | 1429170 | 1 | Kit,Spell Check II, U.S./English, Single Board Machines, WW35, WW50, WW3500, WW5000 |
| –1 | 1429171 | 1 | Kit,Spell Check II, U.K./English, Single Board Machines, WW35, WW50, WW3500, WW5000 |
| –1A | 1432250 | 1 | Kit,Spell Check II, U.S./English, Two Board Machines, WW30, WW50 |
| –1A | 1432260 | 1 | Kit,Spell Check II, United Kingdom/English, Two Board Machines, WW30, WW50 |
| –3 | 85X7326 | 1 | Jumper, Spanish, French, German<br>Not Used With Spell Check II or Single Board Machines |
| –4 | 1432480 | 1 | Label,Keyboard, Spell Check II, Printer, Diskette, Abbreviations<br>Part of Parts Packet 1384923 |
| –4 | 1432482 | 1 | Label,Keyboard, Symbols, Spell Check II, Printer, Diskette, Symbols<br>Part of Parts Packet 1384923 |
| –4 | 1434513 | 1 | Label, Keyboard, Spell Check II, Diskette, Abbreviations |
| –4 | 1434515 | 1 | Label, Keyboard, Spell Check I, Diskette, Symbols |
| –4 | 1434517 | 1 | Label, Keyboard, Spell Check II, Diskette, Symbols |
| –4 | 1434598 | 1 | Label, Keyboard, Spell Check II, Symbols |
| –4 | 1432484 | 1 | Label, Keyboard, Spell Check II, Abbreviations |
| –4 | 1434145 | 1 | Label, Keyboard, Spell Check I, Symbols |

## Assembly 28: Extended Language Option—WW15

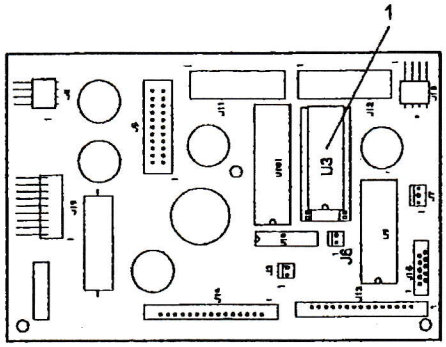


DCA

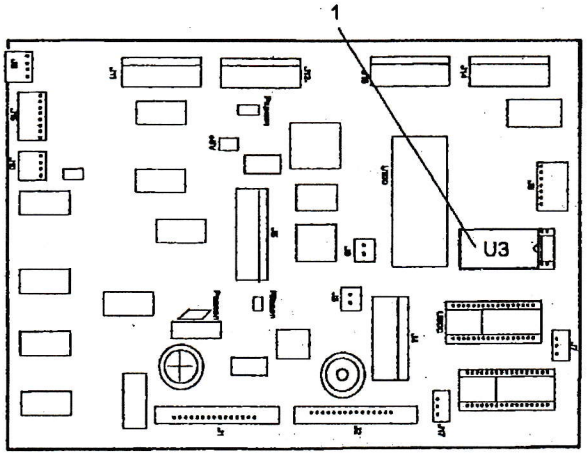


SMT

| Asm—Index | Part Number | Units | Description |
|---|---|---|---|
| 28—1 | 1400377 | 1 | Module; Extended Language (ROECE) |

## Parts Packets and Packaging

| Part Number | Description |
|---|---|
| 1384861 | Combined Parts Packet |
| 1384923 | Keyboard Labels |
| 1384497 | Spring Parts Packet |
| 1384498 | Screw Parts Packet |
| 1384499 | Retainer Parts Packet |
| 1384889 | CRT Arm Parts Packet |
| 1383122 | Sheetfeed, Screws, Washers, Nuts |
| 1383123 | Sheetfeed, Retainers, O Rings |
| 1383124 | Sheetfeed, Springs |
| 1383125 | Sheetfeed, Gears |
| 1383126 | Sheetfeed, Foot, Bushing |
| 7343994 | Discontinuance Kit |

# Part Number Index


| Part Number | Asm–Index | Page |
|---|---|---|
| 0117281 | 1–16 | 9 |
| 0303549 | 11–2 | 33 |
| | 12–2 | 35 |
| 0855252 | 11–7 | 33 |
| | 12–6 | 35 |
| 1043533 | 1–3F | 5 |
| | 24–4 | 63 |
| | 24–4 | 63 |
| 1073449 | 15–21 | 43 |
| 1126831 | 10–38 | 31 |
| 1126832 | 10–3 | 29 |
| | 22–4 | 55 |
| 1126835 | 10–34 | 31 |
| 1135663 | 22–18 | 55 |
| 1171121 | 15–18 | 43 |
| 1171923 | 22–9 | 55 |
| 1181016 | 14–22 | 41 |
| 1181097 | 12–12A | 37 |
| | 13–12A | 39 |
| 1181167 | 11–2A | 33 |
| | 12–2A | 35 |
| 1181851 | 12–9 | 35 |
| 1205606 | 25–7 | 64 |
| 1206717 | 11–16 | 33 |
| 1287007 | 1–20 | 9 |
| 1287008 | 1–20 | 9 |
| 1287009 | 1–20 | 9 |
| 1287010 | 1–20 | 9 |
| 1287011 | 1–20 | 9 |
| 1287012 | 1–20 | 9 |
| 1287013 | 1–20 | 9 |
| 1287911 | 1–20 | 9 |
| 1287912 | 1–22 | 9 |
| 1287913 | 1–20 | 9 |
| 1287914 | 1–20 | 9 |
| 1317943 | 14–7 | 41 |
| 1319133 | 10–41 | 31 |
| | 19–22 | 49 |
| | 24–9 | 63 |
| 1319226 | 21–1 | 53 |
| 1332666 | 1–4 | 7 |
| 1333103 | 19–18 | 51 |
| 1333104 | 19–19 | 51 |
| 1333105 | 19–20 | 51 |
| 1333110 | 19–21 | 51 |
| 1333111 | 19–22 | 51 |
| 1333113 | 19–23 | 51 |
| 1333117 | 19–25 | 51 |
| 1333119 | 19–24 | 51 |
| 1333121 | 19–15 | 51 |
| 1337009 | 14–3 | 41 |
| 1337033 | 10–37 | 31 |
| 1337037 | 10–16 | 29 |
| | 10–22 | 29 |
| 1337055 | 10–24 | 29 |
| 1337071 | 14–18 | 41 |
| 1337194 | 10–14 | 29 |
| | 10–20 | 29 |
| 1337201 | 10–8 | 29 |
| 1337611 | 1–9 | 7 |
| 1337651 | 16–9 | 44 |
| 1337801 | 14–4 | 41 |
| 1337884 | 10–33 | 31 |
| 1337907 | 14–9 | 41 |
| 1337966 | 11–10 | 33 |
| | 12–9 | 35 |
| 1339011 | 15–13 | 43 |
| 1339033 | 10–21 | 29 |
| 1339034 | 10–15 | 29 |
| 1339057 | 10–25 | 29 |
| 1339074 | 10–2 | 29 |
| 1339099 | 10–39 | 31 |
| 1339126 | 8–2 | 25 |
| 1339127 | 8–2 | 25 |
| 1339128 | 8–2 | 25 |
| 1339129 | 8–2 | 25 |
| 1339130 | 8–2 | 25 |
| 1339131 | 8–2 | 25 |
| 1339132 | 8–2 | 25 |
| 1339133 | 8–2 | 25 |
| 1339146 | 16–12 | 44 |
| 1339152 | 16–14 | 44 |
| 1339180 | 10–40 | 31 |
| 1339226 | 10–10 | 29 |
| 1339275 | 15–36 | 43 |
| 1339291 | 15–16 | 43 |
| 1339292 | 15–15 | 43 |
| 1339347 | 15–6 | 43 |
| 1339517 | 17–2 | 45 |
| 1339518 | 17–2 | 45 |
| 1339519 | 17–2 | 45 |
| 1339520 | 17–2 | 45 |
| 1339521 | 17–2 | 45 |
| 1339522 | 17–2 | 45 |
| 1339523 | 17–2 | 45 |
| 1339524 | 17–2 | 45 |
| 1339525 | 17–2 | 45 |
| 1339778 | 14–9A | 41 |
| 1341122 | 22–5 | 55 |
| 1341678 | 10–36 | 31 |
| 1341679 | 16–1 | 44 |
| 1341681 | 10–29 | 31 |
| 1342009 | 11–9 | 33 |
| | 12–8 | 35 |
| 1342081 | 14–16 | 41 |
| | 22–17 | 55 |
| 1342106 | 15–27 | 43 |
| 1342143 | 14–30 | 41 |
| 1342344 | 14–23 | 41 |
| 1342372 | 1–19 | 9 |
| 1342428 | 1–18 | 9 |
| 1342475 | 14–8A | 41 |
| 1342481 | 10–27 | 29 |
| 1342482 | 10–4 | 29 |
| 1356655 | 10–37 | 31 |
| 1356837 | 1–5 | 7 |
| 1358452 | 25–6 | 64 |
| 1362069 | 10–37 | 31 |
| 1362388 | 10–7 | 29 |
| 1364734 | 7–2 | 23 |
| 1364737 | 7–2 | 23 |
| 1364747 | 1–4 | 7 |
| 1364749 | 1–4 | 7 |
| 1364801 | 1–27 | 11 |
| 1364810 | 1–22 | 11 |
| 1364811 | 1–24 | 11 |
| | 1–24 | 11 |
| 1364815 | 1–23 | 11 |
| 1364820 | 1–25 | 11 |
| 1364825 | 1–26 | 11 |
| 1364831 | 1–28 | 11 |
| 1364832 | 1–28 | 11 |
| 1364833 | 1–28 | 11 |
| 1364840 | 10–6 | 29 |
| 1364841 | 10–7 | 29 |
| 1364842 | 10–24 | 29 |
| 1370689 | 7–3 | 23 |
| 1371134 | 6–2 | 21 |
| 1371137 | 6–2 | 21 |
| 1371150 | 1–4 | 7 |
| 1371152 | 1–4 | 7 |
| 1376635 | 1–4 | 7 |
| 1376637 | 1–4 | 7 |
| 1377600 | 1–4 | 7 |
| 1377602 | 1–4 | 7 |
| 1379739 | 6–3 | 21 |
| 1379813 | 9–2 | 27 |
| 1379816 | 6–3 | 21 |
| 1379817 | 6–3 | 21 |
| 1379818 | 6–3 | 21 |
| 1379819 | 6–3 | 21 |
| 1379820 | 6–3 | 21 |
| 1379821 | 6–3 | 21 |
| 1379822 | 6–3 | 21 |
| 1379824 | 7–3 | 23 |
| 1379825 | 7–3 | 23 |
| 1379826 | 7–3 | 23 |
| 1379827 | 7–3 | 23 |
| 1379828 | 7–3 | 23 |
| 1379829 | 7–3 | 23 |
| 1379830 | 7–3 | 23 |
| 1383001 | 2–1 | 13 |
| 1383003 | 2–1 | 13 |
| 1383005 | 2–1 | 13 |
| 1383006 | 2–1 | 13 |

| Part Number | Asm– Index | Page |
|---|---|---|
| 1383007 | 2–1 | 13 |
| 1383008 | 2–1 | 13 |
| 1383009 | 2–1 | 13 |
| 1383010 | 2–1 | 13 |
| 1383011 | 2–1 | 13 |
| 1383012 | 2–1 | 13 |
| 1383013 | 2–1 | 13 |
| 1383014 | 2–1 | 13 |
| 1383015 | 2–1 | 13 |
| 1383016 | 2–1 | 13 |
| 1383017 | 2–1 | 13 |
| 1383018 | 2–1 | 13 |
| 1383019 | 2–1 | 13 |
| 1383020 | 2–1 | 13 |
| 1383021 | 2–1 | 13 |
| 1383022 | 2–1 | 13 |
| 1383023 | 2–1 | 13 |
| 1383024 | 2–1 | 13 |
| 1383026 | 2–1 | 13 |
| 1383027 | 2–1 | 13 |
| 1383028 | 2–1 | 13 |
| 1383029 | 2–1 | 13 |
| | 2–1 | 13 |
| 1383030 | 2–1 | 13 |
| 1383032 | 9–1 | 27 |
| 1383063 | 11–15 | 33 |
| 1383067 | 14–26 | 41 |
| 1383068 | 2–1 | 13 |
| 1383069 | 2–1 | 13 |
| 1383070 | 2–1 | 13 |
| 1383071 | 2–1 | 13 |
| 1383072 | 2–1 | 13 |
| 1383076 | 5–1 | 19 |
| 1383078 | 9–1 | 27 |
| 1383079 | 11–1 | 33 |
| | 12–1 | 35 |
| 1383117 | 11–15 | 33 |
| | 11–22 | 33 |
| 1383118 | 22–8 | 55 |
| 1383119 | 22–13 | 55 |
| 1383127 | 23–17 | 57 |
| 1383128 | 23–18 | 57 |
| 1383130 | 23–1 | 57 |
| 1383131 | 23–2 | 57 |
| 1383132 | 23–57 | 61 |
| 1383133 | 23–61 | 61 |
| 1383134 | 23–55 | 61 |
| 1383135 | 23–31 | 59 |
| 1383136 | 23–58 | 61 |
| 1383137 | 23–32 | 59 |
| 1383138 | 23–3 | 57 |
| 1383139 | 23–13 | 57 |
| 1383140 | 23–19 | 59 |
| 1383141 | 23–15 | 57 |
| 1383142 | 23–14 | 57 |
| 1383143 | 23–16 | 57 |
| 1383145 | 23–41 | 59 |
| 1383146 | 23–4 | 57 |
| 1383147 | 23–5 | 57 |

| Part Number | Asm– Index | Page |
|---|---|---|
| 1383148 | 23–22 | 59 |
| 1383149 | 23–42 | 59 |
| | 23–47 | 61 |
| 1383150 | 23–43 | 59 |
| | 23–48 | 61 |
| 1383151 | 1–21 | 9 |
| 1383365 | 11–11 | 33 |
| 1383366 | 11–11 | 33 |
| 1383374 | 12–11A | 35 |
| 1383375 | 12–11A | 35 |
| 1383376 | 12–11A | 35 |
| 1383377 | 12–11 | 35 |
| 1383378 | 12–11 | 35 |
| 1383379 | 12–11 | 37 |
| 1383380 | 12–11 | 37 |
| 1383393 | 14–31 | 41 |
| 1383409 | 12–11A | 35 |
| 1383411 | 19–8 | 49 |
| 1383485 | 14–31 | 41 |
| 1383486 | 14–26 | 41 |
| 1383807 | 12–11A | 35 |
| 1383835 | 4–1 | 17 |
| 1383836 | 4–1 | 17 |
| 1383837 | 4–1 | 17 |
| 1383838 | 4–1 | 17 |
| 1383839 | 4–1 | 17 |
| 1383840 | 4–1 | 17 |
| 1383841 | 4–1 | 17 |
| 1383842 | 4–1 | 17 |
| 1383843 | 4–1 | 17 |
| 1383844 | 4–1 | 17 |
| 1383845 | 4–1 | 17 |
| 1383846 | 4–1 | 17 |
| 1383847 | 4–1 | 17 |
| 1383848 | 4–1 | 17 |
| 1383849 | 4–1 | 17 |
| 1383850 | 4–1 | 17 |
| 1383851 | 4–1 | 17 |
| 1383852 | 4–1 | 17 |
| 1383853 | 3–1 | 15 |
| | 4–1 | 17 |
| 1383854 | 4–1 | 17 |
| 1383855 | 4–1 | 17 |
| 1383856 | 4–1 | 17 |
| 1383857 | 4–1 | 17 |
| 1383860 | 4–1 | 17 |
| 1383869 | 4–1 | 17 |
| 1383870 | 4–1 | 17 |
| 1383871 | 4–1 | 17 |
| 1383872 | 4–1 | 17 |
| 1383874 | 4–1 | 17 |
| 1383875 | 4–1 | 17 |
| 1383876 | 4–1 | 17 |
| 1383904 | 12–11A | 35 |
| 1384047 | 10–23 | 29 |
| 1384067 | 14–19 | 41 |
| 1384085 | 14–14 | 41 |
| 1384145 | 10–11 | 29 |
| 1384146 | 10–17 | 29 |

| Part Number | Asm– Index | Page |
|---|---|---|
| 1384808 | 3–1 | 15 |
| 1384809 | 10–1 | 29 |
| 1384810 | 10–28 | 31 |
| 1384811 | 14–26 | 41 |
| 1384812 | 14–28 | 41 |
| 1384813 | 14–31 | 41 |
| 1384815 | 12–13 | 37 |
| 1384816 | 14–2 | 41 |
| 1384817 | 15–1 | 43 |
| 1384818 | 15–8 | 43 |
| 1384819 | 15–2 | 43 |
| 1384820 | 15–14 | 43 |
| 1384821 | 15–25 | 43 |
| 1384822 | 16–2 | 44 |
| 1384823 | 16–3 | 44 |
| 1384824 | 16–6 | 44 |
| 1384829 | 10–35 | 31 |
| 1384830 | 14–11 | 41 |
| 1384837 | 3–1 | 15 |
| 1384838 | 3–1 | 15 |
| 1384840 | 3–1 | 15 |
| 1384841 | 3–1 | 15 |
| 1384842 | 3–1 | 15 |
| 1384843 | 3–1 | 15 |
| 1384844 | 3–1 | 15 |
| 1384845 | 3–1 | 15 |
| 1384847 | 3–1 | 15 |
| 1384848 | 3–1 | 15 |
| 1384849 | 3–1 | 15 |
| 1384850 | 3–1 | 15 |
| 1384851 | 3–1 | 15 |
| 1384852 | 3–1 | 15 |
| 1384853 | 3–1 | 15 |
| 1384854 | 3–1 | 15 |
| 1384855 | 3–1 | 15 |
| 1384857 | 3–1 | 15 |
| 1384858 | 3–1 | 15 |
| 1384859 | 3–1 | 15 |
| 1384862 | 9–1 | 27 |
| 1384863 | 9–1 | 27 |
| 1384864 | 9–1 | 27 |
| 1384865 | 9–1 | 27 |
| 1384866 | 9–1 | 27 |
| 1384867 | 9–1 | 27 |
| 1384868 | 9–1 | 27 |
| 1384869 | 9–1 | 27 |
| 1384870 | 9–1 | 27 |
| 1384871 | 9–1 | 27 |
| 1384873 | 9–1 | 27 |
| 1384874 | 9–1 | 27 |
| 1384875 | 9–1 | 27 |
| 1384876 | 9–1 | 27 |
| 1384877 | 9–1 | 27 |
| 1384878 | 9–1 | 27 |
| | 9–1 | 27 |
| 1384879 | 9–1 | 27 |
| 1384880 | 9–1 | 27 |
| 1384881 | 9–1 | 27 |
| 1384883 | 9–1 | 27 |

| Part Number | Asm–Index | Page |
|---|---|---|
| 1384884 | 9–1 | 27 |
| 1384885 | 9–1 | 27 |
| 1384886 | 9–1 | 27 |
| 1384888 | 12–10C | 35 |
| | 13–10C | 39 |
| 1384921 | 10–5 | 29 |
| 1384922 | 11–3 | 33 |
| | 12–3 | 35 |
| | 13–1 | 39 |
| 1384926 | 5–1 | 19 |
| 1384927 | 5–1 | 19 |
| 1384928 | 5–1 | 19 |
| 1384929 | 5–1 | 19 |
| 1384930 | 5–1 | 19 |
| 1384931 | 5–1 | 19 |
| 1384932 | 5–1 | 19 |
| 1384933 | 5–1 | 19 |
| 1384934 | 5–1 | 19 |
| 1384935 | 5–1 | 19 |
| 1384937 | 5–1 | 19 |
| 1384938 | 5–1 | 19 |
| 1384939 | 5–1 | 19 |
| 1384940 | 5–1 | 19 |
| 1384941 | 5–1 | 19 |
| 1384942 | 5–1 | 19 |
| 1384943 | 5–1 | 19 |
| 1384944 | 5–1 | 19 |
| 1384945 | 5–1 | 19 |
| 1384946 | 5–1 | 19 |
| 1384948 | 5–1 | 19 |
| 1384949 | 5–1 | 19 |
| 1384950 | 5–1 | 19 |
| 1384957 | 10–35 | 31 |
| 1384958 | 11–7 | 33 |
| | 12–2 | 35 |
| 1384960 | 1–3A | 5 |
| 1384989 | 10–28 | 31 |
| 1392492 | 2–4 | 13 |
| | 3–4 | 15 |
| | 4–4 | 17 |
| | 5–3 | 19 |
| | 6–4 | 21 |
| | 7–4 | 23 |
| | 8–3 | 25 |
| | 9–3 | 27 |
| 1392956 | 2–6 | 13 |
| | 3–6 | 15 |
| | 4–5 | 17 |
| | 5–4 | 19 |
| | 6–5 | 21 |
| | 7–5 | 23 |
| | 8–4 | 25 |
| | 9–4 | 27 |
| 1393266 | 3–3 | 15 |
| 1393268 | 5–2 | 19 |
| 1393270 | 9–2 | 27 |
| 1393468 | 3–3 | 15 |
| 1393469 | 3–3 | 15 |
| 1393470 | 3–3 | 15 |
| 1393471 | 3–3 | 15 |
| 1393472 | 3–3 | 15 |
| 1393473 | 5–2 | 19 |
| 1393474 | 5–2 | 19 |
| 1393475 | 5–2 | 19 |
| 1393476 | 5–2 | 19 |
| 1393477 | 5–2 | 19 |
| 1393478 | 9–2 | 27 |
| 1393479 | 9–2 | 27 |
| 1393480 | 9–2 | 27 |
| 1393481 | 9–2 | 27 |
| 1393482 | 9–2 | 27 |
| 1393642 | 3–3 | 15 |
| 1393643 | 3–3 | 15 |
| 1393644 | 5–2 | 19 |
| 1393645 | 5–2 | 19 |
| 1393646 | 9–2 | 27 |
| 1393647 | 9–2 | 27 |
| 1393889 | 2–3 | 13 |
| 1393890 | 2–3 | 13 |
| 1393891 | 2–3 | 13 |
| 1393892 | 2–3 | 13 |
| 1393893 | 2–3 | 13 |
| 1393894 | 2–3 | 13 |
| 1393895 | 2–3 | 13 |
| 1393896 | 2–3 | 13 |
| 1394059 | 9–2 | 27 |
| 1394999 | 2–5 | 13 |
| | 3–5 | 15 |
| | 5–2 | 19 |
| | 6–3 | 21 |
| | 7–3 | 23 |
| | 9–2 | 27 |
| 1396346 | 4–3 | 17 |
| 1396348 | 4–3 | 17 |
| 1396349 | 4–3 | 17 |
| 1396350 | 4–3 | 17 |
| 1396351 | 4–3 | 17 |
| 1396352 | 4–3 | 17 |
| 1396353 | 4–3 | 17 |
| 1396354 | 4–3 | 17 |
| 1400151 | 11–15 | 33 |
| 1400153 | 5–1 | 19 |
| 1400154 | 12–11 | 35 |
| 1400155 | 12–11 | 37 |
| 1400156 | 5–1 | 19 |
| 1400157 | 9–1 | 27 |
| 1400158 | 12–11 | 37 |
| 1400164 | 12–11A | 35 |
| 1400165 | 12–11A | 35 |
| 1400166 | 4–1 | 17 |
| | 5–1 | 19 |
| 1400167 | 4–1 | 17 |
| 1400168 | 5–1 | 19 |
| 1400169 | 5–1 | 19 |
| 1400170 | 5–1 | 19 |
| 1400171 | 5–1 | 19 |
| 1400173 | 5–1 | 19 |
| 1400174 | 5–1 | 19 |
| 1400178 | 4–1 | 17 |
| 1400179 | 4–1 | 17 |
| 1400182 | 4–1 | 17 |
| 1400222 | 13–11 | 39 |
| 1400226 | 12–11A | 35 |
| 1400285 | 12–11 | 37 |
| | 13–11 | 39 |
| 1400287 | 12–11 | 37 |
| | 13–11 | 39 |
| 1400288 | 12–11 | 35 |
| | 13–11 | 39 |
| 1400289 | 12–3B | 35 |
| | 24–15 | 63 |
| 1400290 | 11–6 | 33 |
| | 12–5 | 35 |
| | 13–5 | 39 |
| 1400324 | 8–1 | 25 |
| 1400325 | 8–1 | 25 |
| 1400326 | 8–1 | 25 |
| 1400327 | 8–1 | 25 |
| 1400328 | 8–1 | 25 |
| 1400329 | 8–1 | 25 |
| 1400330 | 8–1 | 25 |
| 1400331 | 8–1 | 25 |
| 1400332 | 8–1 | 25 |
| 1400333 | 8–1 | 25 |
| 1400334 | 8–1 | 25 |
| 1400335 | 8–1 | 25 |
| 1400336 | 8–1 | 25 |
| 1400337 | 8–1 | 25 |
| 1400338 | 8–1 | 25 |
| 1400339 | 8–1 | 25 |
| 1400340 | 8–1 | 25 |
| 1400341 | 8–1 | 25 |
| 1400342 | 8–1 | 25 |
| 1400343 | 8–1 | 25 |
| 1400344 | 8–1 | 25 |
| 1400345 | 8–1 | 25 |
| 1400346 | 8–1 | 25 |
| 1400347 | 8–1 | 25 |
| 1400348 | 8–1 | 25 |
| 1400349 | 8–1 | 25 |
| 1400350 | 8–1 | 25 |
| 1400351 | 8–1 | 25 |
| 1400352 | 8–1 | 25 |
| 1400353 | 8–1 | 25 |
| 1400354 | 8–1 | 25 |
| 1400355 | 8–1 | 25 |
| 1400356 | 8–1 | 25 |
| 1400357 | 1–3A | 5 |
| 1400358 | 19–8 | 49 |
| 1400368 | 12–11A | 37 |
| | 13–11 | 39 |
| 1400369 | 12–11A | 37 |
| | 13–11 | 39 |
| 1400370 | 12–11A | 37 |
| | 13–11 | 39 |
| 1400372 | 27–1 | 66 |
| 1400373 | 27–1 | 66 |

| Part Number | Asm–Index | Page |
|---|---|---|
| 1400374 | 27–1 | 66 |
| 1400377 | 28–1 | 67 |
| 1400385 | 12–11A | 37 |
| 1400387 | 19–16 | 51 |
| 1400388 | 19–17 | 51 |
| 1400389 | 10–5 | 29 |
| 1400390 | 10–23 | 29 |
| 1400391 | 26–1A | 65 |
| 1400392 | 26–1A | 65 |
| 1400393 | 26–1A | 65 |
| 1400394 | 26–1A | 65 |
| 1400395 | 12–11A | 35 |
| 1400396 | 12–11A | 35 |
| 1400397 | 12–11A | 35 |
| 1400399 | 13–11 | 39 |
| 1400405 | 13–11 | 39 |
| 1400407 | 13–11 | 39 |
| 1400408 | 13–11 | 39 |
| 1400409 | 15–1 | 43 |
| 1400419 | 24–3 | 63 |
| 1400420 | 24–3 | 63 |
| 1400421 | 24–3 | 63 |
| 1400431 | 7–1 | 23 |
| 1400432 | 7–1 | 23 |
| 1400433 | 7–1 | 23 |
| 1400434 | 7–1 | 23 |
| 1400435 | 7–1 | 23 |
| 1400436 | 7–1 | 23 |
| 1400437 | 7–1 | 23 |
| 1400438 | 7–1 | 23 |
| 1400439 | 7–1 | 23 |
| 1400440 | 7–1 | 23 |
| 1400441 | 7–1 | 23 |
| 1400442 | 7–1 | 23 |
| 1400443 | 7–1 | 23 |
| 1400444 | 7–1 | 23 |
| 1400445 | 7–1 | 23 |
| 1400446 | 7–1 | 23 |
| 1400447 | 7–1 | 23 |
| 1400448 | 7–1 | 23 |
| 1400449 | 7–1 | 23 |
| 1400450 | 7–1 | 23 |
| 1400451 | 7–1 | 23 |
| 1400452 | 7–1 | 23 |
| 1400453 | 7–1 | 23 |
| 1400454 | 7–1 | 23 |
| 1400455 | 7–1 | 23 |
| 1400456 | 7–1 | 23 |
| 1400457 | 7–1 | 23 |
| 1400458 | 7–1 | 23 |
| 1400459 | 7–1 | 23 |
| 1400460 | 7–1 | 23 |
| 1400461 | 7–1 | 23 |
| 1400500 | 6–1 | 21 |
| 1400501 | 6–1 | 21 |
| 1400502 | 6–1 | 21 |
| 1400503 | 6–1 | 21 |
| 1400504 | 6–1 | 21 |
| 1400505 | 6–1 | 21 |
| 1400506 | 6–1 | 21 |
| 1400507 | 6–1 | 21 |
| 1400508 | 6–1 | 21 |
| 1400509 | 6–1 | 21 |
| 1400510 | 6–1 | 21 |
| 1400511 | 6–1 | 21 |
| 1400513 | 6–1 | 21 |
| 1400514 | 6–1 | 21 |
| 1400515 | 6–1 | 21 |
| 1400518 | 6–1 | 21 |
| 1400519 | 6–1 | 21 |
| 1400520 | 6–1 | 21 |
| 1400521 | 6–1 | 21 |
| 1400522 | 6–1 | 21 |
| 1400531 | 9–1 | 27 |
| 1400532 | 9–1 | 27 |
| 1400534 | 12–11A | 35 |
| 1400536 | 9–1 | 27 |
| 1400540 | 7–1 | 23 |
| 1400541 | 8–1 | 25 |
| 1417460 | 16–1 | 44 |
| 1425047 | 19–20 | 49 |
| 1429170 | 27–1 | 66 |
| 1429171 | 27–1 | 66 |
| 1429172 | 12–9 | 35 |
| | 13–9 | 39 |
| 1429181 | 1–4 | 5 |
| 1429183 | 1–4 | 5 |
| 1429185 | 1–4 | 5 |
| 1429187 | 1–4 | 5 |
| 1429193 | 1–4 | 5 |
| 1429195 | 1–4 | 5 |
| 1429197 | 1–4 | 5 |
| 1429199 | 1–4 | 5 |
| 1429201 | 1–4 | 5 |
| 1429223 | 1–4 | 5 |
| 1429225 | 1–4 | 5 |
| 1429227 | 1–4 | 5 |
| 1429370 | 1–4 | 5 |
| 1429372 | 1–4 | 5 |
| 1429374 | 1–4 | 5 |
| 1430110 | 12–10E | 35 |
| | 12–12 | 37 |
| | 13–10E | 39 |
| | 19–15A | 49 |
| | 24–6 | 63 |
| 1430111 | 12–10 | 35 |
| 1430112 | 16–1 | 44 |
| 1430113 | 10–36 | 31 |
| 1430114 | 11–19 | 33 |
| | 12–14 | 37 |
| 1430118 | 10–29 | 31 |
| 1430119 | 11–20 | 33 |
| | 12–15 | 37 |
| 1430122 | 1–12 | 7 |
| 1430156 | 1–2 | 5 |
| | 1–2 | 11 |
| | 1–2 | 11 |
| 1430157 | 1–1 | 5 |
| 1430157 | continued | |
| | 1–1 | 11 |
| | 1–1 | 11 |
| 1430158 | 3–2 | 15 |
| 1430163 | 1–7 | 7 |
| 1430168 | 1–15 | 9 |
| | 1–15 | 11 |
| | 1–15 | 11 |
| 1430172 | 1–13 | 9 |
| 1430175 | 1–11 | 7 |
| 1430176 | 1–10 | 7 |
| 1430189 | 3–2 | 15 |
| 1430192 | 1–4 | 5 |
| | 1–4A | 7 |
| 1430194 | 1–4 | 5 |
| 1430289 | 13–3 | 39 |
| 1430310 | 11–21 | 33 |
| | 12–16 | 37 |
| | 13–16 | 39 |
| 1430311 | 11–21 | 33 |
| | 12–16 | 37 |
| | 13–16 | 39 |
| 1430312 | 11–21 | 33 |
| | 12–16 | 37 |
| | 13–16 | 39 |
| 1430313 | 11–21 | 33 |
| | 12–16 | 37 |
| | 13–16 | 39 |
| 1430314 | 11–21 | 33 |
| | 12–16 | 37 |
| | 13–16 | 39 |
| 1430315 | 11–21 | 33 |
| | 12–16 | 37 |
| | 13–16 | 39 |
| 1430316 | 11–21 | 33 |
| | 12–16 | 37 |
| | 13–16 | 39 |
| 1430317 | 11–21 | 33 |
| | 12–16 | 37 |
| | 13–16 | 39 |
| 1430318 | 11–21 | 33 |
| | 12–16 | 37 |
| | 13–16 | 39 |
| 1430328 | 11–21 | 33 |
| | 12–16 | 37 |
| | 13–16 | 39 |
| 1430329 | 11–21 | 33 |
| | 12–16 | 37 |
| | 13–16 | 39 |
| 1430330 | 11–21 | 33 |
| | 12–16 | 37 |
| | 13–16 | 39 |
| 1430331 | 11–21 | 33 |
| | 12–16 | 37 |
| | 13–16 | 39 |
| 1430332 | 11–21 | 33 |
| | 12–16 | 37 |
| | 13–16 | 39 |
| 1430333 | 11–21 | 33 |

| Part Number | Asm– Index | Page |
|---|---|---|
| 1430333 | continued | |
| | 12–16 | 37 |
| | 13–16 | 39 |
| 1430334 | 11–21 | 33 |
| | 12–16 | 37 |
| | 13–16 | 39 |
| 1430361 | 11–5 | 33 |
| | 12–3A | 35 |
| | 13–2 | 39 |
| 1430379 | 11–18 | 33 |
| | 19–14 | 49 |
| 1430397 | 15–3 | 43 |
| 1430406 | 15–20 | 43 |
| 1430409 | 15–24 | 43 |
| 1430410 | 15–22 | 43 |
| 1430411 | 15–23 | 43 |
| 1430412 | 15–28 | 43 |
| 1430413 | 15–29 | 43 |
| 1430414 | 15–26 | 43 |
| 1430427 | 14–27 | 41 |
| 1430437 | 14–12 | 41 |
| 1430450 | 26–2 | 65 |
| 1430451 | 15–34 | 43 |
| 1430455 | 15–35 | 43 |
| 1430460 | 15–31 | 43 |
| 1430462 | 22–23 | 55 |
| 1430481 | 16–5 | 44 |
| 1430488 | 22–7 | 55 |
| 1430489 | 10–30 | 31 |
| 1430491 | 10–32 | 31 |
| 1430492 | 10–31 | 31 |
| 1430495 | 16–4 | 44 |
| 1430496 | 22–3 | 55 |
| 1430498 | 10–6 | 29 |
| 1430753 | 1–13 | 9 |
| 1430762 | 1–3E | 5 |
| 1430778 | 1–3C | 5 |
| 1430779 | 1–3B | 5 |
| 1430781 | 1–3D | 5 |
| 1430786 | 1–4A | 7 |
| 1430788 | 1–4 | 5 |
| | 1–4A | 7 |
| 1430790 | 1–4 | 5 |
| | 1–4A | 7 |
| 1430807 | 20–1 | 52 |
| 1431279 | 1–4 | 5 |
| 1431281 | 1–4 | 5 |
| 1431284 | 1–4 | 5 |
| 1431286 | 1–4 | 5 |
| 1431289 | 1–4 | 5 |
| 1431291 | 1–4 | 5 |
| | 1–4A | 7 |
| 1431293 | 1–4 | 5 |
| | 1–4A | 7 |
| 1431295 | 1–13 | 9 |
| 1431296 | 1–13 | 9 |
| 1431299 | 12–10D | 35 |
| | 13–10D | 39 |
| 1431354 | 10–43 | 31 |

| Part Number | Asm– Index | Page |
|---|---|---|
| 1431354 | continued | |
| | 19–13 | 49 |
| | 22–7A | 55 |
| | 24–14 | 63 |
| 1431372 | 16–1 | 44 |
| 1431373 | 10–36 | 31 |
| 1431374 | 24–6 | 63 |
| 1431375 | 12–14 | 37 |
| | 13–14 | 39 |
| 1431376 | 12–15 | 37 |
| | 13–15 | 39 |
| 1431378 | 4–2 | 17 |
| 1431379 | 4–2 | 17 |
| 1431484 | 16–16 | 44 |
| 1431751 | 18–6 | 46 |
| 1431758 | 18–7 | 46 |
| 1431761 | 18–1 | 46 |
| 1431763 | 18–2 | 46 |
| 1431765 | 18–9 | 46 |
| 1431767 | 18–8 | 46 |
| 1431770 | 18–10 | 46 |
| 1431771 | 16–17 | 44 |
| | 19–21 | 49 |
| | 24–11 | 63 |
| 1431840 | 24–13 | 63 |
| 1432105 | 19–9 | 49 |
| 1432106 | 19–16 | 49 |
| 1432107 | 19–17 | 49 |
| 1432108 | 19–12 | 49 |
| 1432120 | 19–3 | 49 |
| 1432123 | 19–19 | 49 |
| 1432125 | 19–15 | 49 |
| 1432198 | 12–10B | 35 |
| | 13–10B | 39 |
| | 19–10 | 49 |
| | 24–7 | 63 |
| 1432205 | 24–2 | 63 |
| 1432217 | 12–10A | 35 |
| | 13–10A | 39 |
| 1432230 | 24–5 | 63 |
| 1432250 | 27–1A | 66 |
| 1432260 | 27–1A | 66 |
| 1432270 | 26–1 | 65 |
| 1432280 | 26–1 | 65 |
| 1432290 | 26–1 | 65 |
| | 27–1B | 66 |
| | 27–1B | 66 |
| 1432300 | 26–1 | 65 |
| | 27–1B | 66 |
| 1432310 | 26–1 | 65 |
| | 27–1B | 66 |
| 1432355 | 22–20 | 55 |
| 1432357 | 22–10 | 55 |
| 1432358 | 1–17 | 9 |
| 1432359 | 1–19 | 9 |
| 1432363 | 22–14 | 55 |
| 1432447 | 25–1 | 64 |
| 1432450 | 24–12 | 63 |
| 1432452 | 24–12 | 63 |

| Part Number | Asm– Index | Page |
|---|---|---|
| 1432452 | continued | |
| | 26–2 | 65 |
| 1432454 | 1–14 | 9 |
| 1432479 | 11–17A | 33 |
| 1432480 | 24–12 | 63 |
| | 27–4 | 66 |
| 1432482 | 19–18 | 49 |
| | 24–12 | 63 |
| | 27–4 | 66 |
| 1432484 | 1–14 | 9 |
| | 27–4 | 66 |
| 1432486 | 1–4 | 5 |
| 1432492 | 1–4 | 5 |
| 1432494 | 1–4 | 5 |
| 1432540 | 24–12 | 63 |
| 1432542 | 24–12 | 63 |
| 1432574 | 1–8 | 7 |
| 1432576 | 25–5 | 64 |
| 1432577 | 25–4 | 64 |
| 1432579 | 1–4 | 5 |
| 1432591 | 1–7A | 7 |
| 1432603 | 10–12 | 29 |
| | 10–18 | 29 |
| 1432606 | 10–13 | 29 |
| | 10–19 | 29 |
| 1433004 | 2–2 | 13 |
| 1433013 | 11–14 | 33 |
| 1433022 | 11–23 | 33 |
| 1433028 | 11–17 | 33 |
| 1433035 | 11–8 | 33 |
| 1433101 | 2–2 | 13 |
| 1433107 | 2–2 | 13 |
| 1433125 | 11–14 | 33 |
| 1433661 | 1–6 | 7 |
| 1433662 | 1–3 | 5 |
| 1433728 | 15–6A | 43 |
| 1433810 | 22–22 | 55 |
| 1433812 | 22–2 | 55 |
| 1433813 | 22–21 | 55 |
| 1434108 | 1–4 | 5 |
| 1434112 | 1–4 | 5 |
| | 1–4A | 7 |
| 1434114 | 1–4 | 5 |
| 1434145 | 1–14 | 9 |
| | 27–4 | 66 |
| 1434241 | 17–3 | 45 |
| 1434338 | 4–2 | 17 |
| 1434500 | 1–3 | 5 |
| 1434513 | 1–14 | 9 |
| | 19–18 | 49 |
| | 27–4 | 66 |
| 1434515 | 1–14 | 9 |
| | 19–18 | 49 |
| | 27–4 | 66 |
| 1434517 | 1–14 | 9 |
| | 19–18 | 49 |
| | 27–4 | 66 |
| 1434598 | 1–14 | 9 |
| | 27–4 | 66 |

| Part Number | Asm – Index | Page |
|---|---|---|
| 1440671 | 10 – 9 | 29 |
| 1621170 | 22 – 15 | 55 |
| | 22 – 19 | 55 |
| 1621171 | 19 – 29 | 51 |
| | 22 – 12 | 55 |
| 1621187 | 19 – 26 | 51 |
| 1621718 | 22 – 6 | 55 |
| 1622274 | 15 – 19 | 43 |
| 1622302 | 19 – 30 | 51 |
| | 22 – 16 | 55 |
| 1622344 | 19 – 28 | 51 |
| 1622391 | 22 – 11 | 55 |
| 1622401 | 10 – 42 | 31 |
| | 19 – 23 | 49 |
| | 19 – 27 | 51 |
| | 24 – 10 | 63 |
| 1622434 | 15 – 30 | 43 |
| 1622660 | 19 – 11 | 49 |
| | 24 – 8 | 63 |
| 1623622 | 11 – 13 | 33 |
| 1623630 | 11 – 12 | 33 |
| 1623641 | 11 – 4 | 33 |
| | 12 – 4 | 35 |
| | 13 – 4 | 39 |
| 1624874 | 10 – 26 | 29 |
| 2102365 | 16 – 17 | 44 |
| 2683193 | 19 – 2 | 49 |
| 2683194 | 19 – 7 | 49 |
| 2683195 | 19 – 5 | 49 |
| 2683197 | 19 – 6 | 49 |
| 2683200 | 19 – 1 | 49 |
| 6820821 | 19 – 4 | 49 |
| 85X7326 | 26 – 3 | 65 |
| | 27 – 3 | 66 |
| 85X7419 | 17 – 1 | 45 |
| 85X7420 | 17 – 1 | 45 |

SA40-0774-00